SCHEMATIC DIAGRAM SYMBOLS

CR	CONTROL RELAY
TD	TIME DELAY RELAY
AR	ALARM RELAY
ETM	ELAPSED TIME METER
M	MOTOR STARTER OR CONTACTOR COIL
PC	PHOTO CELL
R	BEACON ALARM LIGHT LETTER INDICATES COLOR R=RED, A=AMBER, B=BLUE, G=GREEN
R	PILOT LIGHT LETTER INDICATES COLOR R=RED, A=AMBER, B=BLUE, G=GREEN
	OUTPUT DV/DT FILTER
	HEATING ELEMENT
	TRANSFORMER
	CURRENT TRANSFORMER
	GROUND CONNECTION
	GENERATOR
HORN	HORN
5	FULL VOLTAGE NON-REVERSING (FVNR) MOTOR STARTER OR CONTACTOR NUMBER DESIGNATES NEMA SIZE
	NORMALLY OPEN CONTACT
	NORMALLY CLOSED CONTACT
	RTU OR PLC CONTACT
HAND AUTO XO	2 POSITION SELECTOR SWITCH POSITION LEGEND: X=CLOSED O=OPEN
HAND OFF AUTO XOO	3 POSITION SELECTOR SWITCH HAND – OFF – AUTO POSITION LEGEND: X=CLOSED O=OPEN
	NORMALLY CLOSED PUSH BUTTON
	LOCKOUT STOP PUSH BUTTON
	NORMALLY OPEN PUSH BUTTON
	EMERGENCY STOP PUSH BUTTON (MAINTAINED)
AMPS POLES	DISCONNECT SWITCH SHOWN WITH RATING AND NUMBER OF POLES
	LIMIT OR POSITION SWITCH
PSH	PRESSURE SWITCH HIGH
PSL	PRESSURE SWITCH LOW
	FLOW SWITCH
	LEVEL FLOAT SWITCH
ICTO	TIMER RELAY CONTACT INSTANTANEOUS CLOSE TIME DELAY OPEN
NOTC	TIMER RELAY CONTACT NORMALLY OPEN TIME DELAY CLOSE.
	TEMPERATURE SWITCH
	FUSE
AMPS	FUSEHOLDER OR FUSEBLOCK
	THERMAL OVERLOAD RELAY
	TERMINAL BLOCK
	DEVICE LOCATED AT REMOTE LOCATION
	CONDUIT SEALOFF

POWER SINGLE LINE DIAGRAM SYMBOLS

	JUNCTION BOX WITH POWER DISTRIBUTION BLOCK OR LUGS
	CONDUIT SEALOFF
	LTC CONNECTION
	MC CONNECTION
	BOND TO METALLIC WATER PIPE
UM	UTILITY METER
HP	MOTOR, NUMBER DESIGNATES NEMA HORSEPOWER SIZE
	FUSE
AMPS	FUSEHOLDER OR FUSEBLOCK
AMPS POLES	CIRCUIT BREAKER, SHOWN WITH TRIP RATING AND NUMBER OF POLES
AMPS MCP POLES	MOTOR CIRCUIT PROTECTOR WITH TRIP RATING AND NUMBER OF POLES
AMPS POLES	DISCONNECT SWITCH SHOWN WITH RATING AND NUMBER OF POLES
MMR	MOTOR MANAGEMENT RELAY
SSS	SOLID STATE STARTER
VFD	VARIABLE FREQUENCY DRIVE
HF	HARMONIC FILTER
EOL	ELECTRONIC OVERLOAD RELAY
	GROUND CONNECTION

ELECTRICAL ABBREVIATIONS

A	AMPERE
AFD	ADJUSTABLE FREQUENCY DRIVE
AFF	ABOVE FINISHED FLOOR
AFG	ABOVE FINISHED GRADE
AI	ANALOG INPUT
AIC	AMPS INTERRUPTING CAPACITY
AO	ANALOG OUTPUT
AS	AIR SUPPLY
ATS	AUTOMATIC TRANSFER SWITCH
BC	BYPASS CONTACTOR
C	CONDUIT
CB	CIRCUIT BREAKER
CCW	COUNTER CLOCKWISE
CL2	CHLORINE
CON	CONTACTOR
CPB	CONTROL PULLBOX
CU	COPPER, BARE
CV	CONTROL VALVE
CW	CLOCKWISE
DCS	DISTRIBUTED CONTROL SYSTEM
DI	DISCRETE INPUT
DO	DISCRETE OUTPUT
DP	DISTRIBUTION PANEL
DV/DT	DIFFERENTIAL VOLTAGE/TIME
DWG	DRAWING
ETM	ELAPSED TIME METER
EOL	ELECTRONIC OVERLOAD
EXIST	EXISTING
FA	FOUL AIR
FC	FAIL CLOSED
FE	FLOW ELEMENT
FLA	FULL LOAD AMPS
FS	FLOW SWITCH
FVNR	FULL VOLTAGE NON-REVERSING
FW	FINISHED WATER
GFCI	GROUND FAULT CIRCUIT INTERRUPTER
GFP	GROUND FAULT PROTECTION
GND	GROUND
GPD	GALLONS PER DAY
GPH	GALLONS PER HOUR
GPM	GALLONS PER MINUTE
GRS	GALVANIZED RIGID STEEL
H, HI	HIGH
H2S	HYDROGEN SULFIDE
HMI	HUMAN MACHINE INTERFACE
HOA	HAND-OFF-AUTO
HOR	HAND-OFF-REMOTE
I	CURRENT
IC	INSTRUMENTATION CABLE
ICR	INTERMITTENT CYCLE REACTOR
IO	INPUT/OUTPUT
ISC	SHORT CIRCUIT CURRENT
JB	JUNCTION BOX
L, LO	LOW
LAN	LOCAL AREA NETWORK
LC	LOOP CONTROLLER
LCL	LEVEL CONTROL, LOW
LCP	LOCAL CONTROL PANEL
LOS	LOCK-OUT-STOP
LOR	LOCAL/OFF/REMOTE
LS	LEVEL (i.e., FLOAT) SWITCH
LTC	LIQUIDTIGHT FLEXIBLE METAL CONDUIT
M	MOTOR
MA	MANUAL/AUTO
mA	MILLIAMP
MAX	MAXIMUM
MC	MANUFACTURER'S CABLE
MCB	MAIN CIRCUIT BREAKER
MCC	MOTOR CONTROL CENTER
MCP	MOTOR CIRCUIT PROTECTOR
MFR(S)	MANUFACTURER(S)
MGD	MILLION GALLONS PER DAY
MGL	MILLIGRAMS PER LITER
MH	MANHOLE
MIN	MINIMUM
MOV	MOTOR OPERATED VALVE
MMR	MOTOR MANAGEMENT RELAY
MTU	MASTER TELEMETRY UNIT
NEC	NATIONAL ELECTRICAL CODE
NECA	NATIONAL ELECTRICAL CONTRACTOR ASSOCIATION
N.C.	NORMALLY CLOSED
N.O.	NORMALLY OPEN
NOTC	NORMALLY OPEN TIMED CLOSED
NPW	NON-POTABLE WATER
NS	NITROGEN SUPPLY
NTS	NOT TO SCALE
NTU	TURBIDITY
OF	OVERFLOW
OIT	OPERATOR INTERFACE TERMINAL
OL	OVERLOAD
OLR	OVERLOAD RELAY
OO	ON/OFF (MAINTAINED)
OR	OFF-REMOTE
OSC	OPEN/STOP/CLOSE
P	PHASE
PB	PULL BOX
PCP	PROCESS CONTROL PANEL
POV	PRESSURE CONTROL VALVE
PFR	PHASE/POWER FAILURE RELAY
PI	PULSE INPUT
PLC	PROGRAMMABLE LOGIC CONTROLLER
PLI	PLANT INFLUENT
PMP	PUMP
PNL	PANEL
PO	PULSE OUTPUT
PPB	POWER PULLBOX
PPG	POUNDS PER GALLON
PPH	POUNDS PER HOUR
PPM	PARTS PER MILLION
PR	PAIR
PRES	PRESSURE
PS	PRESSURE SWITCH
PSH	PRESSURE SWITCH, HIGH
PSI	POUNDS PER SQUARE INCH
PV	PROCESS VARIABLE
RAS	RETURN ACTIVATED SLUDGE
RW	RAW WATER
RF	RADIO FREQUENCY
RIO	REMOTE INPUT OUTPUT
RS	RAW SEWAGE
RSP	RAW SEWAGE PUMP
RST	RESET
RTD	RESISTANCE TEMPERATURE DETECTOR
RTU	REMOTE TELEMETRY UNIT
RWT	REFLECTED WAVE TRAP
SCA	SHORT CIRCUIT AMPS
SEQ	SERVICE ENTRANCE EQUIPMENT
SES	SERVICE ENTRANCE SECTION
SLC	SINGLE LOOP CONTROLLER
SLOS	START-LOCK-OUT-STOP
SMC	SUBMERSIBLE MANUFACTURER CABLE
SO2	SULFUR DIOXIDE
SP	SET POINT
SPC	SPARE CONDUIT
SPR	SPARE
SS	START/STOP
SSS	SOLID STATE STARTER (SOFT START)
ST	SHUNT TRIP
TC	TELEPHONE CABLE
TS	TEMPERATURE SWITCH
TVSS	TRANSIENT VOLTAGE SURGE SUPPRESSOR
TYP	TYPICAL
UG	UNDERGROUND
UL	UNDERWRITERS LABORATORIES
UNO	UNLESS NOTED OTHERWISE
V	VOLT
VFD	VARIABLE FREQUENCY DRIVE
W	WATT, WIRE
WAS	WASTE ACTIVATED SLUDGE
WP	WEATHERPROOF
XFMR	TRANSFORMER
XMR	TRANSFORMER
XMTR	TRANSMITTER
ZS	POSITION (i.e., LIMIT) SWITCH

SITE PLAN SYMBOLS

	TELEPHONE OUTLET
$	SINGLE POLE SWITCH
$3	3 WAY SWITCH
$4	4-WAY SWITCH
$M	MANUAL MOTOR STARTER
	SPECIAL PURPOSE OR WELDING OUTLET
S	SMOKE DETECTOR
T	THERMOSTAT
	FIELD DEVICE
	GROUND ROD
	DUPLEX RECEPTACLE
	ANTENNA MAST
	CONDUIT SEALOFF
	DISCONNECT SWITCH
M	MOTOR

CIRCUIT SCHEDULE LEGEND

AA-BBB-CCC-D

AA	= CIRCUIT TYPE
BBB	= FROM
CCC	= TO
D	= SEQUENCE NUMBER

ELECTRICAL LINETYPES

	EXPOSED CONDUIT
	EXISTING EXPOSED CONDUIT
	UNDERGROUND CONDUIT
	EXISTING UNDERGROUND CONDUIT
	BARE COPPER GROUND CONDUCTOR
	EXISTING OR FUTURE
	NEW ELECTRICAL EQUIPMENT
	DEMOLITION
	DETAIL VIEW OR MATCHING
	CAPPED CONDUIT STUB OUT

CXXX
PXXX — GROUPED CONDUIT AND CIRCUIT IDENTIFICATION TAGS. REFER TO THE POWER SINGLE-LINE, SCHEMATIC CONNECTION DIAGRAMS AND CIRCUIT SCHEDULE FOR CONDUIT SIZES AND CONTENTS. P=POWER PANEL, C=CONTROL

GENERAL NOTES

1. THE COMPLETED INSTALLATION SHALL COMPLY WITH LATEST REVISION OF APPLICABLE FEDERAL, STATE, AND LOCAL CODES, ORDINANCES, AND REGULATIONS. THE CONTRACTOR SHALL OBTAIN NECESSARY PERMITS AND INSPECTIONS REQUIRED BY THE AUTHORITIES HAVING JURISDICTION. ALL WORK SHALL BE COMPLETED IN A NEAT, WORKMANLIKE MANNER IN ACCORDANCE WITH THE LATEST NEC STANDARDS OF INSTALLATION UNDER COMPETENT SUPERVISION. INSTALL GROUNDING PER NEC.
2. VISIT THE SITE PRIOR TO BIDDING TO BECOME FAMILIAR WITH EXISTING CONDITIONS AND OTHER FACTORS, WHICH MAY EFFECT THE EXECUTION OF THE WORK. INCLUDE ALL RELATED COSTS IN THE INITIAL BID PROPOSAL.
3. THE CONTRACTOR SHALL COORDINATE WORK WITH THE UTILITIES PROVIDING SERVICES ON THIS PROJECT, AND SHALL COMPLY WITH ALL THEIR INSTALLATION REQUIREMENTS.
4. ALL MATERIALS SHALL BE NEW AND OF THE BEST QUALITY, MANUFACTURED IN ACCORDANCE WITH THE LATEST REVISION OF NEMA, ANSI, UL, OR OTHER APPLICABLE STANDARDS. THE USE OF MANUFACTURERS NAMES, MODELS, AND NUMBERS IS INTENDED TO ESTABLISH STYLE, QUALITY, APPEARANCE, USEFULNESS, AND BID PRICE.
5. PROTECT ALL ELECTRICAL MATERIAL AND EQUIPMENT INSTALLED AGAINST DAMAGE BY OTHER TRADES, WEATHER CONDITIONS, OR ANY OTHER PREVENTABLE CAUSES. EQUIPMENT DAMAGED DURING SHIPPING OR CONSTRUCTION, PRIOR TO ACCEPTANCE BY THE ENGINEER OR THE OWNER, WILL BE REJECTED AS DEFECTIVE.
6. LEAVE THE SITE CLEAN. REMOVE ALL DEBRIS, EMPTY CARTONS, TOOLS, CONDUIT, WIRE SCRAPS AND ALL MISCELLANEOUS SPARE EQUIPMENT AND MATERIALS USED IN THE WORK DURING CONSTRUCTION. ALL COMPONENTS SHALL BE FREE OF DUST, GRIT AND FOREIGN MATERIALS, LEFT AS NEW BEFORE FINAL ACCEPTANCE OF WORK. DAMAGED PAINT AND FINISHES SHALL BE TOUCHED UP OR REPAINTED WITH MATCHING COLOR PAINT AND FINISH.
7. CIRCUIT CONDUCTORS #6 AWG OR SMALLER SHALL BE THWN STRANDED COPPER. #4 AWG THROUGH #2 AWG SHALL BE XHHW STRANDED COPPER. #1 AWG OR LARGER SHALL BE XHHW-2 STRANDED COPPER. MINIMUM POWER CONDUCTOR SIZE SHALL BE #12 AWG WITH #12 AWG GROUND.
8. UNDERGROUND CONDUITS SHALL BE SCHEDULE 40 PVC. MINIMUM CONDUIT DEPTH SHALL BE 24 INCHES. MINIMUM UNDERGROUND CONDUIT SIZE SHALL BE 1 INCH.
9. CONDUITS SHALL BE MARKED AT EACH END WITH MATCHING NUMBERED BRASS TAGS. SPARE CONDUITS SHALL HAVE A PULL STRING INSTALLED, SECURED, AND CAPPED.
10. EXPOSED CONDUITS SHALL BE GALVANIZED RIGID STEEL (GRS). MINIMUM SIZE 3/4 INCH, UNLESS OTHERWISE NOTED ON THE PLANS.
11. SAFETY SWITCHES, ELECTRICAL DISTRIBUTION EQUIPMENT, CONTROL PANELS, AND OTHER ELECTRICAL DEVICES SHALL BE UL LISTED, AND RATED FOR HEAVY DUTY SERVICE.
12. WIRING DEVICES SHALL BE SPECIFICATION GRADE.
13. THE CONTRACTOR IS RESPONSIBLE FOR MANAGING, SCHEDULING, DOCUMENTING, AND PERFORMING THE WORK SO THAT A COMPLETE ELECTRICAL, INSTRUMENTATION AND CONTROL SYSTEM FOR THE FACILITY IS PROVIDED. ACCURATE SHOP AND RECORD DRAWINGS, AND O&M MANUALS SHALL BE SUBMITTED PRIOR TO FINAL ACCEPTANCE OF THE WORK.
14. TYPICAL DETAILS SHALL APPLY IN ALL CASES, WHETHER SPECIFICALLY REFERRED TO OR NOT.

SHEET INDEX

E1 – COVER SHEET SYMBOLS
E2 – UNDERGROUND CONDUIT PLAN / CONSTRUCTION NOTES
E3 – ONE-LINE DIAGRAM, PANEL ELEVATION, AND CONDUIT SCHEDULE
E4 – PUMP CONTROL PANEL ELEVATIONS & BILL OF MATERIALS
E5 – PUMP CONTROL SCHEMATIC DIAGRAM
E6 – RTU ELEVATIONS & BILL OF MATERIALS
E7 – RTU CONTROL POWER DIAGRAM AND FUSE SCHEDULE
E8 – RTU –DISCRETE INPUT CONTROLS DI1 – 24VDC
E9 – RTU –DISCRETE INPUT CONTROLS DI2 – 24VDC
E10 – RTU –DISCRETE OUTPUT CONTROLS DO1 –24VDC
E11 – RTU –ANALOG INPUT CONTROLS AI1 – 24VDC
E12 – ELECTRICAL DETAILS
E13 – ELECTRICAL PID LOOP DIAGRAM

Alliance Service & Control Specialists
4846 S. 40Th. St. Phoenix, Az 85040
(602) 431-8434

E1

PROJECT
CITY OF GLOBE
PINESTREET
ELECTRCIAL UPGRADES

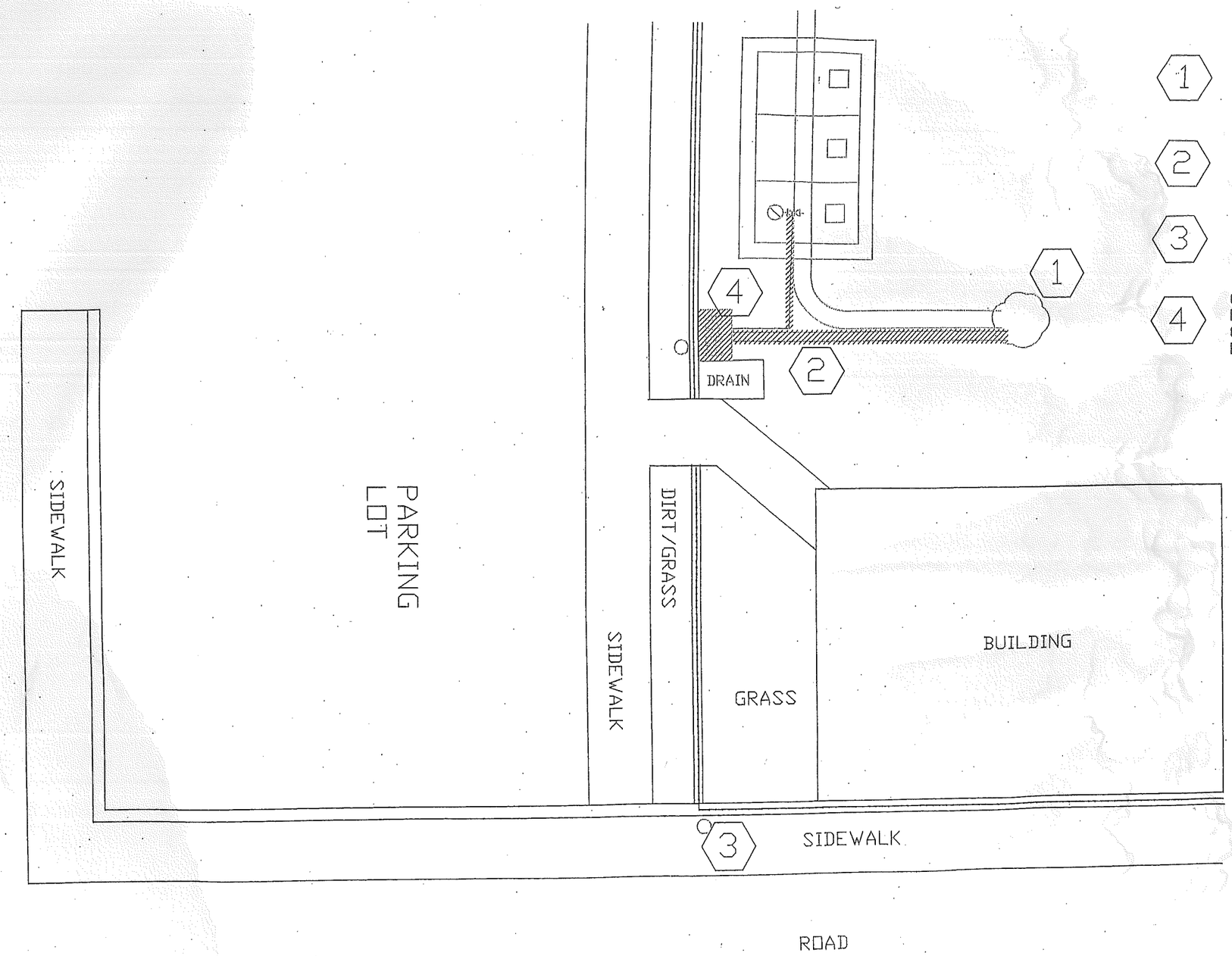

1. WELL PUMP HIDDEN UNDER ROCK
2. EXISTING CONDUIT RUNS, WILL NEED TO BE REMOVED
3. LOCATION OF EXISTING POWER POLE, WITH POLE MOUNTED TRANSFORMERS, 3-150KVA
4. CURRENT SES, STARTER, AND PANEL WILL NEED TO BE REMOVE. GET WITH CUSTOMER TO IDENTIFY EQUIPMENT TO BE SAVED/REUSED.

E1

ALLIANCE SERVICE & CONTROL SPECIALISTS
PHOENIX, AZ
(602)431-8434

TITLE: PINESTREET SITE ELEVATION

REV	BY:	DATE:

DWG BY: JRJ	DATE: 10/29/07
APPD BY: ROD ROBERTSON	JOB No: ----
SCALE: NONE	UL508 APPROVAL MATRIX: E164765
FILE NAME: B:\HES\PINESTREET\E1	SHEET 1 OF 12

Alliance Service & Control Specialists
4846 S. 40Th. St. Phoenix, Az 85040
(602) 431-8434

PROJECT: CITY OF GLOBE
PINESTREET
POWER UPGRADES

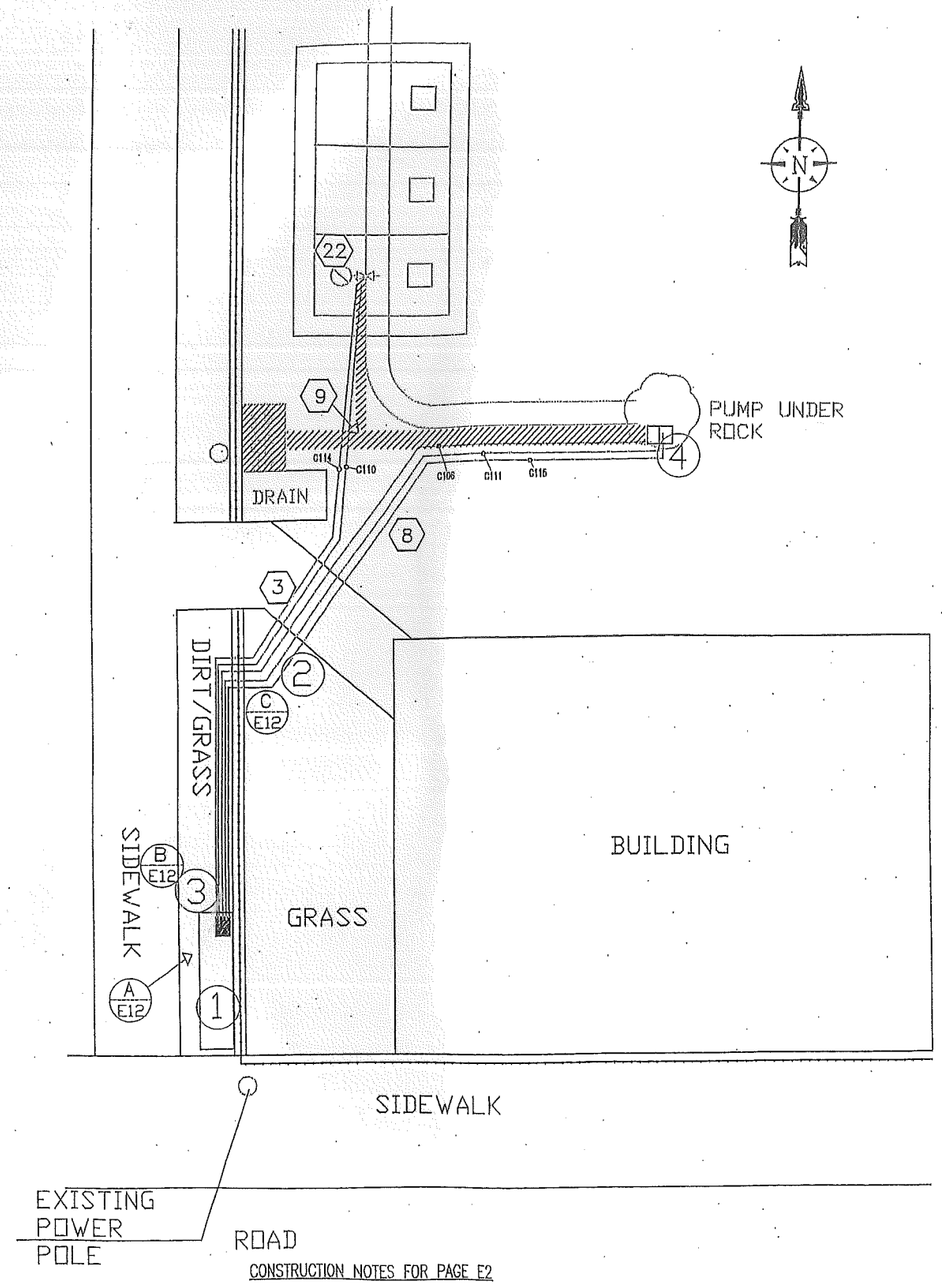

CONSTRUCTION NOTES FOR PAGE E2

1. LOCATION OF NEW SES AND IFS CABINET IS TO BE INSTALLED
2. NEW CONDUIT LOCATION, MUST BE AT LEAST 24" BELOW FINAL GRADE.
3. NEW SITE GROUNDING, 2-3/4" X 10' COPPER RODS BURIED MIN OF 6' APART
4. NEW JUNCTION BOX

GENERAL CONSTRUCTION NOTES

1. ELECTRICAL CONTRACTOR SHALL COORDINATE WITH THE CUSTOMER AND LOCATE ELECTRICAL UTILITY TO OBTAIN NEW ELECTRICAL SERVICE TO THE SITE. THE CUSTOMER WILL PROVIDE THE UTILITY SERVICE CONTRACT AND PAY FOR THE NEW UTILITY PRIMARY SERVICE SYSTEM. THE CONTRACTOR SHALL PROVIDE THE SES PAD, PRIMARY AND SECONDARY CONDUITS WITH MULE TAPE AS REQUIRED BY THE UTILITY ELECTRICAL PLANS.
2. COORDINATE ELECTRICAL PLANS AND WORK WITH CUSTOMER, REPORT ALL DISCREPANCIES OR REQUESTED FIELD CHANGES WITH THE ELECTRICAL ENGINEERING RECORD PRIOR TO PROCEEDING WITH WORK
3. RETURN EXISTING LAWN, LANDSCAPE, AND CONCRETE WALKWAY TO ORIGINAL CONDITION AFTER CONDUIT'S ARE INSTALLED AND WORK IS COMPLETED. MAINTAIN 3' OF CLEARANCE IN FRONT OF ELECTRIC GEAR PER NEC 2005
4. USE SCH 40 PVC LISTED CONDUIT BELOW GRADE, TYPICALLY GRS CONDUIT ON EXPOSED ABOVE GROUND RUNS, WITH LIQUIDTIGHT FLEXIBLE WEATHERPROOF METAL CONDUIT WITH EXTERNAL GROUNDING FOR TRADE SIZES 1 1/2" AND LARGER TO MOTORS.
5. CONSTRUCT ALL ELECTRICAL SYSTEMS TO CURRENT NEC 2005 CODE AND LOCAL CODES AND STANDARDS. WHEN IN CONFLICT, THE MOST STRINGENT CODE WILL DOMINATE
6. DEVIATIONS FROM CONDUIT RUNS SHALL BE PERMITTED WITH THE WRITTEN APPROVAL OF BOTH THE CITY OF GLOBE AND ELECTRICAL ENGINEER OF RECORD. COMBINING CIRCUITS IN A SINGLE CONDUIT RACEWAY IS PERMITTED WITH PROPER IDENTIFICATIONS AND CONDUCTOR DERATING. FOURTEEN DAYS PRIOR APPROVAL REQUIRED FOR ALL DEVIATIONS AND ELECTRICAL SUBSTITUTIONS.
7. FIELD VERIFY ACTUAL ELECTRICAL CIRCUITRY AND INTEGRITY OF ALL EXISTING SYSTEM COMPONENTS BEING REUSED AND RECONFIGURED PRIOR TO WORK
8. ALL CONDUIT FOR AREA POWER, LIGHT, AND INPUTS SHALL BE ROUTED AND INSTALLED IN SUCH A MANNER THAT WILL NOT DAMAGE EXISTING FACILITIES SHOULD DAMAGE OCCUR TO ANY EXISTING FACILITIES, IT WILL BE THE CONTRACTORS RESPONSIBILITY TO REPLACE/REPAIR IN-KIND SAME. WILL BE TO THE SATISFACTION AND AT NO COST TO CUSTOMER. MUST BE APPROVED BY ELECTRICAL ENGINEER OF RECORD, CUSTOMER, AND CITY INSPECTOR.
9. REMOVE ALL UNUSED EXISTING AND TEMPORARY ELECTRICAL CONDUITS AND CONDUCTORS. REPAIR/REPLACE ALL EXISTING ELECTRICAL CABLE & CONDUIT DISTURBED BY THIS PROJECT
10. PRIOR TO COVERING ANY ELECTRICAL CONDUITS, CONTACT THE CITY INSPECTION DEPARTMENT 24 HOURS IN ADVANCE FOR APPROVAL.
11. ALL PANEL AND FLOOR PENETRATIONS SHALL BE WATER TIGHT, WEATHERPROOF, CHEMICAL RETARDENT, AND FIRE RETARDENT
12. CONTRACTOR SHALL PROVIDE AND CONTRACT WITH A CITY OF GLOBE APPROVED I&C SYSTEM INTEGRATOR, SUCH AS ALLIANCE SERVICE AND CONTROL SPECIALISTS, INC.
13. ALL CABLE / TERMINATION'S / CIRCUIT BREAKERS SHALL BE MINIMUM OF 75 C
14. MINIMUM POWER CONDUCTOR SIZE IS #12 CU UNLESS NOTED OTHERWISE.
15. CONTACT BLUESTAKING AT 1-800-STAKE-IT AND THE OWNER TO LOCATE ALL EXISTING UNDERGROUND FACILITIES PRIOR TO TRENCHING.
16. CONTRACTOR SHALL PROVIDE A NEW 120/240V 1 PHASE WYE CONNECTED MINIMUM 100KA TVSS UNIT FOR LIGHT PANEL. THE TVSS UNIT SHALL HAVE FORM C DRY CONTACTS FOR RTU ALARM FAULT STATUS AND A SURGE COUNTER DISPLAY WITH PHASE FAULT INDICATOR LIGHTS. THE TVSS UNIT SHALL UTILIZE INTERNAL M.O.V. LIGHTNING ARRESTER TECHNOLOGY. THE TVSS SHALL BE EXTERNAL TO LIGHT PANEL. INTERNAL TVSS OPTIONAL UNIT IS UNACCEPTABLE. SYMCOM SYC-240-1-DC-SC OR APPROVED EQUAL.
17. CONTRACTOR SHALL PROVIDE A 15KVA 480V TO 120/240V 2ø 3W TRANSFORMER INTEGRATED INTO IFS SWITCHBOARD SEE THE 1-LINE DIAGRAM FOR GROUNDING AND FAULT CURRENT MINIMUMS.
18. INSTALL A NEW 200A 480/277V 3ø 4W, NEMA 3R ELECTRICAL SERVICE PANEL PER THE APS REQUIREMENTS. PROVIDE SILICON CAULK SEALANT AROUND THE CABINET PENETRATIONS OF THE ELECTRICAL GEAR TO MINIMIZE DUST EFFECTS. PROVIDE PHASE ABC CLOCKWISE ROTATION AT THE SERVICE.
19. CONTRACTOR SHALL PROVIDE A NEW 277/480V 3 PHASE WYE CONNECTED MINIMUM 300KA TVSS UNIT. THE TVSS UNIT SHALL HAVE A NEMA 3R DRIP SHIELD OR NEMA 4 CABINET ENCLOSURE FOR OUTDOOR INSTALLATIONS. THE TVSS UNIT SHALL HAVE FORM C DRY CONTACT FOR RTU ALARM FAULT STATUS AND A SURGE COUNTER DISPLAY WITH PHASE FAULT INDICATOR LIGHTS. THE TVSS UNIT SHALL UTILIZE INTERNAL M.O.V. LIGHTING ARRESTER TECHNOLOGY. THE TVSS UNIT SHALL BE EXTERNAL TO THE MCC GEAR. INTERNAL MCC BUCKET TVSS UNITS ARE NOT EXCEPTABLE. SYCOM SYCX-480-3Y-DC-SC OR APPROVED EQUAL.
20. CONTRACTOR SHALL PROVIDE A NEW REMOTE TERMINAL UNIT (RTU) CABINET PER THE PLANS ON SHEET E6 TO E7. THE RTU CABINET IS LOCATED IN INDEPENDENT FREE STANDING (IFS) SWITCHBOARD. PROVIDE A SILICON CAULK SEALANT AROUND THE BASE OF THE ENCLOSURE TO MINIMIZE DUST EFFECTS. PROVIDE THE ONE ANTENNA PER THE BILL OF MATERIALS. ANTENNA POLES AND MOUNTING HEIGHTS SHALL BE PROVIDED BY CUSTOMER PER THE CUSTOMER RADIO SURVEY STUDY. MAXIMUM 1/2 HELIX CABLE LENGTH IS 50'.
21. A SEPARATE EQUIPMENT GROUND CONDUCTOR SHALL BE PROVIDED IN EACH CONDUIT RUN
22. CONTRACTOR SHALL PROVIDE AND INSTALL NEW MAGNETIC FLOW METER. SPARLING TIGERMAG FM-0651301 OR APPROVED EQUAL.
23. TO THE FULLEST EXTENT PERMITTED BY LAW, CONTRACTOR SHALL IDENTIFY AND HOLD HARMLESS OWNER AND ELECTRICAL ENGINEER AND THEIR AGENTS AND EMPLOYEES FROM AND AGAINST ALL CLAIM, DAMAGES, LOSSES, AND EXPENSES, INCLUDING BUT NOT LIMITED TO ATTORNEY'S FEES ARISING OUT OF OR RESULTING FROM THE PERFORMANCE WORK, PROVIDED THAT ANY SUCH CLAIM, DAMAGE, LOSS, OR EXPENSE IS ATTRIBUTED TO BODILY INJURY, SICKNESS, DISEASE, OR DEATH, OR TO INJURY TO OR DESTRUCTION OF TANGIBLE PROPERTY (OTHER THEN THE WORK ITSELF). INCLUDING LOSS OF USE RESULTING THEREFROM BUT ONLY TO THE EXTENT CAUSED IN WHOLE OR IN PART ANY NEGLIGENT ACT OR OMISSION OF THE CONTRACTOR OR A SUBCONTRACTOR, ANYONE DIRECTLY OR INDIRECTLY EMPLOYED BY THEM OR ANYONE FOR WHOSE ACTS THEY MAY BE LIABLE, REGARDLESS OF WHEATER OR NOT SUCH CLAIM, DAMAGE, LOSS, OR EXPENSE IS CAUSED IN PART BY A PARTY IDENTIFIED HEREAFTER.

THE ELECTRICAL ENGINEER WILL NOT BE RESPONSIBLE FOR CONTRACTOR'S MEANS, METHODS, TECHNOLOGIES, SEQUENCES, OR PROCEDURES OF CONSTRUCTION OR THE SAFETY PRECAUTION AND PROGRAMS INCIDENT THERE TO, AND THE ELECTRICAL ENGINEER WILL NOT BE RESPONSIBLE FOR CONTRACTOR'S FAILURE TO PERFORM THE WORK IN ACCORDANCE WITH CONTRACT DOCUMENTS.

ALL CONCEPTS, DESIGNS, AND DATA INDICATED ON THESE DOCUMENTS ARE THE SOLE PROPERTY OF ALLIANCE SERVICE & CONTROL SPECIALISTS AND SHALL NOT BE USED FOR ANY OTHER PURPOSE THAN ORIGINALLY INTENDED WITHOUT THE WRITTEN PERMISSION OF THE ELECTRICAL ENGINEER.

REV.	BY:	DATE:	DWG BY: JRJ	DATE: 10/29/07
			APPD BY: ROD ROBERTSON	JOB No: ----
			SCALE: NONE	UL508 APPROVAL NTRI E164765
			FILE NAME: BLUES\PINESTREET\E2	SHEET 1 OF 2

TITLE: PINESTREET UNDERGROUND CONDUIT PLAN CONSTRUCTION NOTES

E2

Alliance Service & Control Specialists
4846 S. 40Th. St. Phoenix, Az 85040
(602) 431-8434

PROJECT
CITY OF GLOBE
PINESTREET
ELECTRICAL UPGRADES

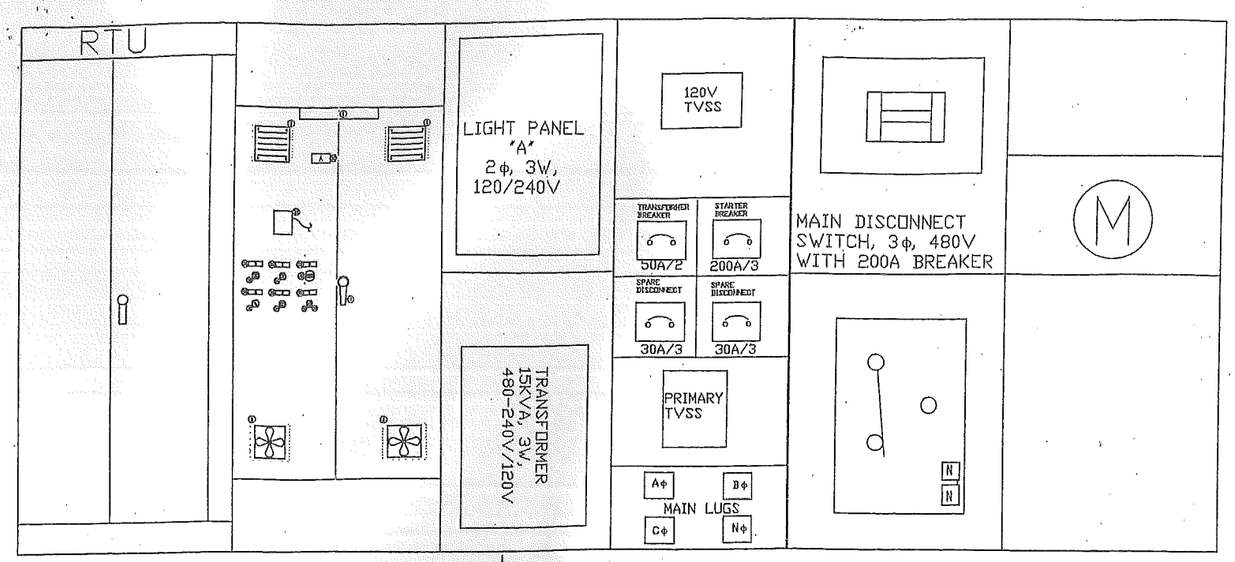

NEW PANEL A SCHEDULE

PANEL: A	VOLTAGE: 120/240VAC 1φ, 3W	MAINS: 125A MAIN LUGS ONLY	
TYPE: BOLT-ON CB'S	ENCLOSURE: NEMA 1, SURFACE MOUNTED		BRC AIC 10,000

CIRCUIT DESCRIPTION	BKR	CKT	VA LOAD A	VA LOAD B	CKT	BKR	CIRCUIT DESCRIPTION
MAIN	60	1			2	60	MAIN
SPARE	20	3	–	–	4	20	RTU
SPARE	20	5	–	1200	6	20	SPARE
SPARE	20	7	–	–	8	20	SPARE
SPARE	20	9	–	–	10	20	SPARE
SPARE	20	11	–	–	12	20	SPARE
	20	13	–	–	14	20	
	20	15	–	–	16	20	
	20	17	0	0	18	20	
	20	19	0	0	20	20	
	–	21	0	0	22	–	
	–	23	0	0	24	–	
	–	25	0	0	26	–	
	–	27	0	0	28	–	
	–	29	0	0	30	–	
CONNECTED VA PER PHASE:			– 1200				
CONNECTED AMPS PER PHASE:			– 10				
CONTINUOUS LIGHTING LOAD (200) VA			– 250				
CONTINUOUS MOTOR LOAD (25%) VA			– –				
DEMAND VA PER PHASE:			– 1450				
TOTAL AMPS PER PHASE:			– 13				

NOTES:
"*" DENOTES CONTINUOUS LOAD

CONDUIT SCHEDULE

ITEM	SIZE	WIRE SIZE	DESTINATION TO	DESTINATION FROM
C100	?	PER APS REQUIREMENTS	200A, SERVICE METER	POLE MOUNTED TRANSFORMER
C101	---	4-3/0 / 1-#6G	AUTOMATIC TRANSFER SWITCH	200A, SERVICE METER
C102	---	4-3/0 / 1-#6G	TVSS	AUTOMATIC TRANSFER SWITCH
C103	---	4-3/0 / 1-#6G	480VAC BUS	TRANSFER SWITCH
C104	---	4-3/0 / 1-#6G	STARTER DISCONNECT	480VAC BUS
C105	---	4-3/0 / 1-#6G	STARTER PANEL FOR PUMP	STARTER DISCONNECT
C106	1½"	3-2/0 / 1-#6G	MOTOR	STARTER PANEL
C107	---	2-#6 / 1-#10G	TRANSFORMER DISCONNECT	480VAC BUS
C108	---	2-#6 / 1-#10G	TRANSFORMER	TRANSFORMER DISCONNECT
C109	---	3-#2 / 1-#8G	LIGHT PANEL	TRANSFORMER
C110	2"	2-#18 2-#14 / 2-#14G	FLOWMETER (DI AND 24VDC POWER)	RTU
C111	1¼"	2-#14 / 1-#14G	WELL LEVEL TRANSMITTER	RTU
C112	---	2-#12 / 1-#12G	RTU - 120V FEEDER	LIGHT PANEL
C113	---	---	---	---
C114	1"	2-#18 / 1-#14G	FLOWMETER FOR AI	RTU
C115	1½"	2-#12 / 1-#12G	120VAC FEED TO LEVEL TRANSMITTER	LIGHT PANEL

LOAD CALCULATIONS FOR 200A SERVICE

LOAD CALCULATIONS SES, 200A, 480V, 3φ, 4W

LOADS	A# LOADS	B# LOADS	C# LOADS
LARGEST MOTOR 100HP 124A @125%	– 155 A	– 155 A	– 155 A
NEW LOAD -15KVA XFMR	– 32 A	– 32 A	–
TOTAL SES LOADS	– 187 A	– 187 A	– 155 A

1. NEW ELECTRICAL SERVICE METER, 200A, 480V, 3φ, 4W. NEW SERVICE FROM POLE ALONG ROAD, ON SIDEWALK
2. TVSS - SYCX-480-3Y-DC-SC, MAINTAIN 30' TAP RULE PER MANUFACTURE, NEMA 3R
3. NEW MANUAL TRANSFERSWITCH, 200A, 480V, 3φ, 4W, TO SWITCH UPON UTILITY POWER FAILURE, TO MANUALLY SWITCH TO TEMPORARY BACK-UP GENERATOR
4. NCC 400A BUS. 277/480V, 3φ, 3W, NEMA 3R BRACED AT 10,000 AIC (MIN)
5. 200A, 3φ, 3W START PANEL DISCONNECT WITH CIRCUIT BREAKER
6. INSTALL A 225A/3 FUSED SIZE 4 SOFT STARTER WITH CLASS FUSE SIZED PER NEC 2005 ART. 430.52 @ 175% FLC
7. 50A, 3φ, 3W TRANSFROMER DICONNECT WITH 50A CIRCUIT BREAKER
8. NEW TRANSFORMER 15KVA, 480-240/120V, 2φ, 3W. BOND TO EXISTING GROUNDING SEE NOTE 10.
9. LIGHT PANEL, "LP-A", 100A/2, 120/240V, 3W, 2φ, WITH A 120VAC TVSS TO PROTECT PANEL POWER. TVSS MODEL SYCOM SYC-240-1-DC-SC
10. NEW GROUNDING RODS WILL BE 9/4" X 10' COPPER, RODS MUST BE MIN OF 6', 2/0 COPPER GROUND TO GENERATOR, TRANSFORMER, AND WATER BONDS.
11. INSTALL MAIN DISCONNECT WITH CIRCUIT BREAKER 200A/3

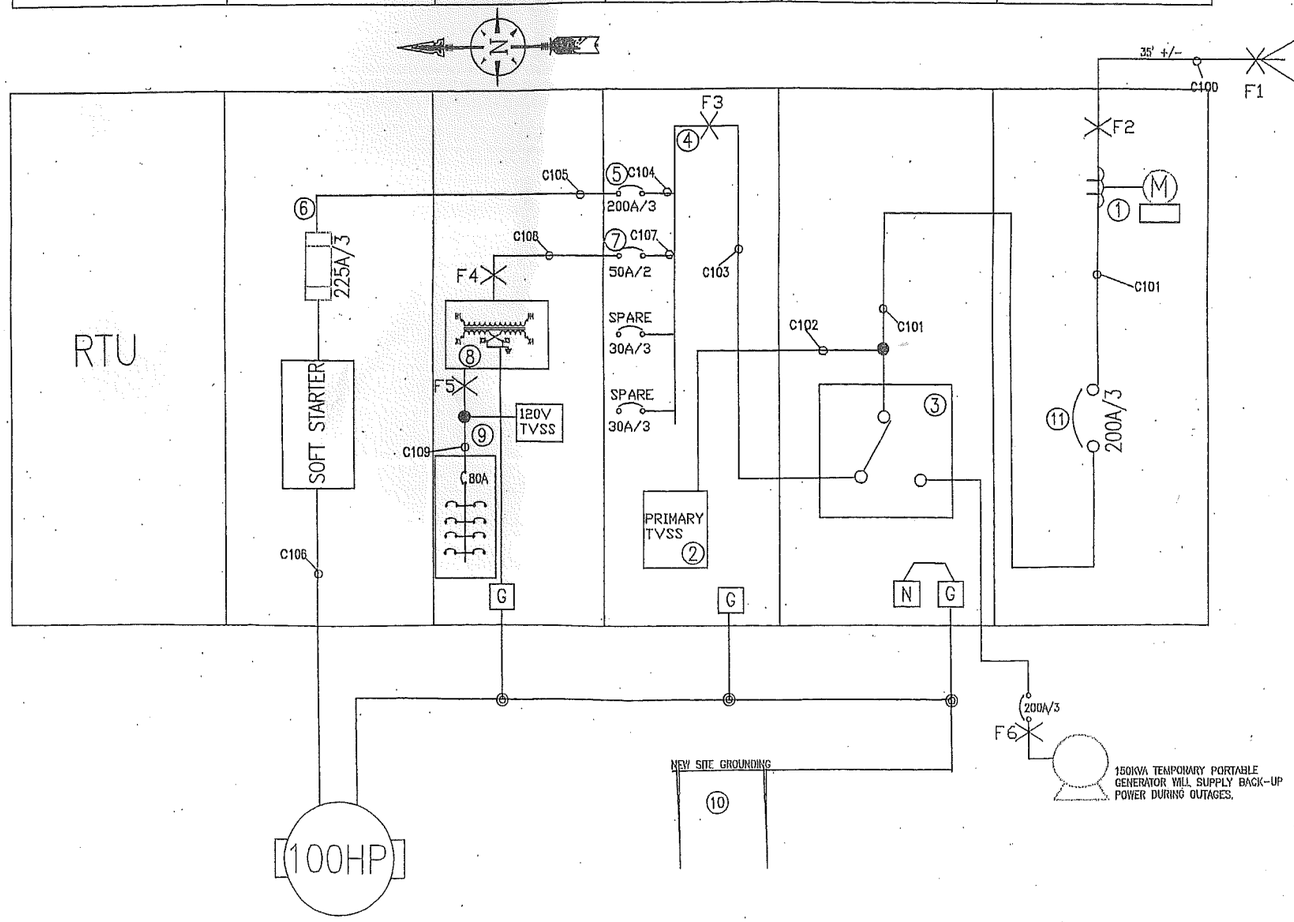

FAULT CALCULATIONS

FAULT AT F1, 22,000A, PER APS FAULT CURRENT TABLE FOR 150KVA POLEMOUNTED TRANSFORMERS.

FAULT AT F2.
L=50'
C=16673, FOR #4/0

$f = \frac{(1.732)(L)(If1)}{(C)(V)} = \frac{(1.732)(50)(22000)}{(16673)(480)}$
=0.24A

$M = \frac{1}{1+f} = \frac{1}{1+0.24}$
=0.8

If2= (If1)(M)= (22,000)(0.8)
=17,600A
WITH MOTOR CONTRIBUTIONS
Inot=124A(6)=744A
If4= 17,600+744A
=18,344A

FAULT AT F3,
L=25FT
C=12843

$f = \frac{(1.732)(L)(If2)}{(C)(V)} = \frac{(1.732)(25)(17600)}{(12843)(480)}$
=0.12

$M = \frac{1}{1+f} = \frac{1}{1+0.12}$
=0.89

If3= (If2)(M)= (17600)(0.89)
=15,664A
WITH MOTOR CONTRIBUTIONS
If3= 15,664A+744A
= 16,408A

FAULT AT F4,
L=6FT
C=3806

$f = \frac{(2)(L)(If3)}{(C)(V)} = \frac{(2)(25)(17600)}{(12843)(480)}$
=0.1

$M = \frac{1}{1+f} = \frac{1}{1+0.1}$
=0.9

If4= (If3)(M)= (15664)(0.9)
=14,097A
WITH MOTOR CONTRIBUTIONS
If4= 14,097A+744A
= 14,841A

FAULT AT F5,

$f = \frac{(If4)(Vo)(ZT)}{(1000000)(KVA)} = \frac{(14,841)(480)(1.5)}{(150,000)(15)}$
=7.12

$M = \frac{1}{1+f} = \frac{1}{1+7.12}$
=0.12

If5= (If4)(M)($\frac{480}{240}$)= (15664)(0.9)($\frac{480}{240}$)
=1,828A

FAULT AT F6,

$Ig = \frac{(KVA)}{(1.732)(480)} = \frac{(150000)}{(1.732)(480)}$
=180A

$If6 = \frac{(Ig)}{(\%Z)} = \frac{(180)}{(0.12)}$
=1500A

WITH MOTOR CONTRIBUTIONS
If6= 1,500A+744A
= 2,244A

THE FAULT CURRENT AT F6 IS LESS THAN FAULT CURRENT AT F2, TO DETERMINE THE FAULT CURRENTS AT F3, F4, AND F5, IS APPROPRIATE.

REV	BY:	DATE:

TITLE: PINESTREET
ONE LINE DIAGRAM, PANEL ELEVATION AND CONDUIT SCHEDULE

DWG BY: JRJ
DATE: 10/29/07
APPD BY: ROD ROBERTSON
JOB No: ----
SCALE: NONE
UL508 APPROVAL NTR/ E164765
FILE NAME: BLUES\PINESTREET\E3
SHEET 2 OF 2

E3

Alliance Service & Control Specialists
4846 S. 40Th. St. Phoenix, Az 85040
(602) 431-8434

PROJECT
CITY OF GLOBE
PINESTREET
ELECTRICAL UPGRADES

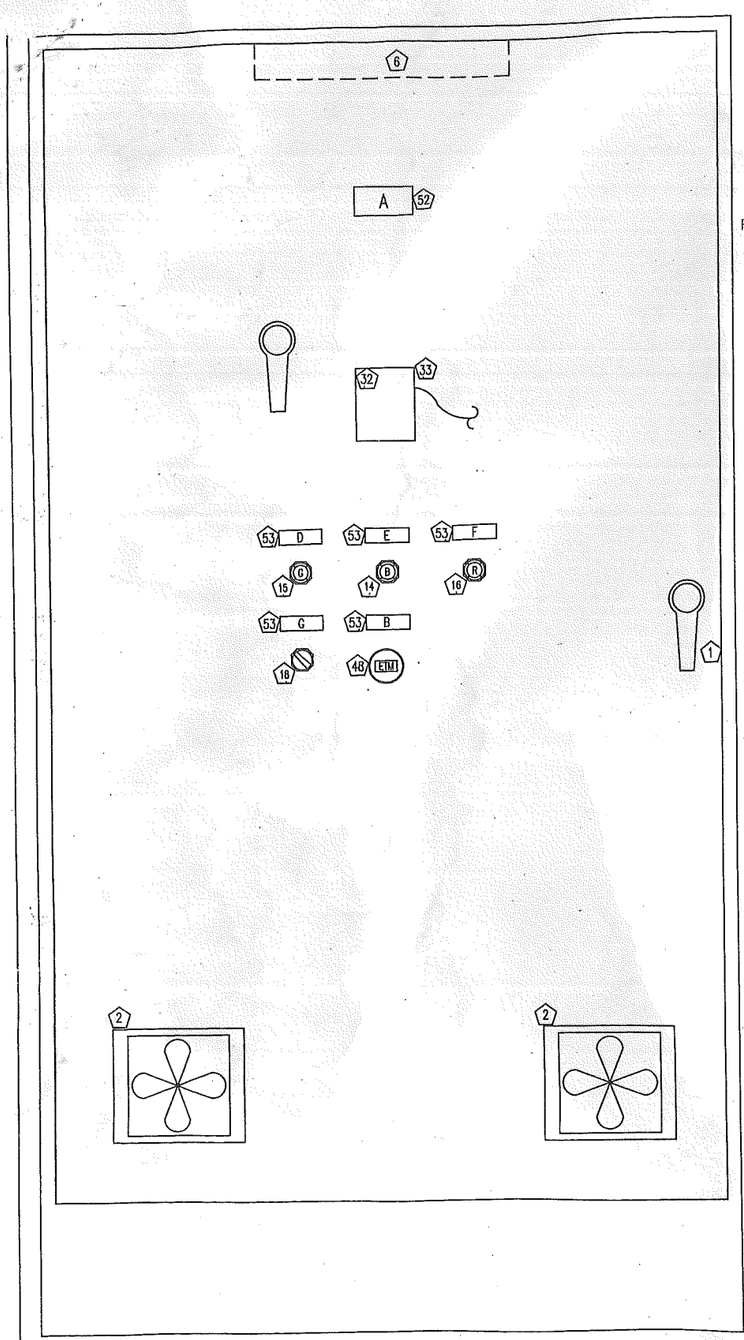

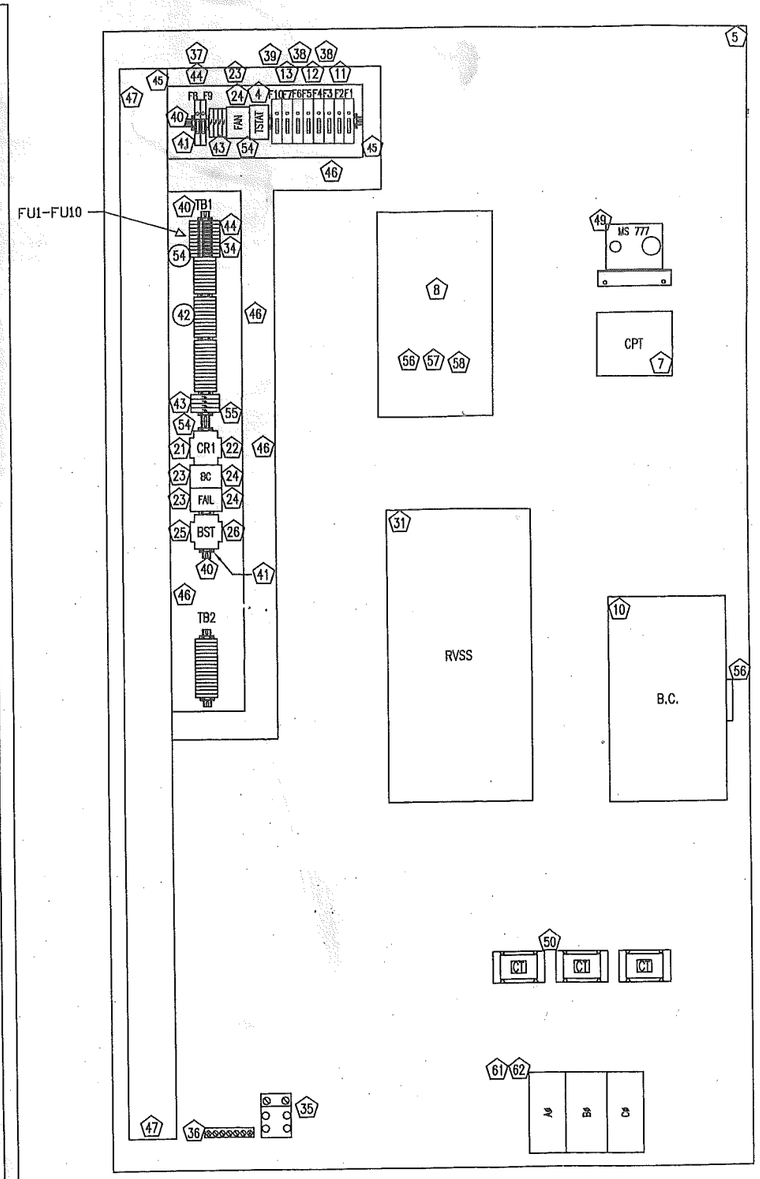

BILL OF MATERIALS

ITEM	MANUFACTURER	PART No.	DESCRIPTION	SECOND LINE
A	ASCS	ID	PINESTREET WELL, 100HP	
B	ASCS	ID	ELAPSE TIME METER	
C	ASCS	ID	---	
D	ASCS	ID	WELL PUMP RUN	
E	ASCS	ID	BACKSPIN TIMING	
F	ASCS	ID	SOFT STARTER FAULT	
G	ASCS	ID	WELL MOTOR CONTROL	HAND OFF AUTO

BILL OF MATERIALS

ITEM	QTY	MANUFACTURER	PART NUMBER	DESCRIPTION
1	–	---	---	---
2	2	HOFFMAN	TFP61	6" COMPOSITE FAN AND GRILLE
3	–	---	---	---
4	1	HOFFMAN	ATEMNO	CABINET THERMOSTAT
5	1	HOFFMAN	A90P48F1	BACK PANEL
6	1	HOFFMAN	ALF16D18R	18" DOOR SWITCH CABINET LIGHT
7	1	SOLA-HEVI DUTY	E500	500VA CONTROL TRANSFORMER
8	1	CUTLER HAMMER	ED3200	FUSE BLOCK HOLDER 200A, 3POLE, J CLASS PHENLIC TYPE
9	–	---	---	---
10	1	CUTLER HAMMER	CN15NN3A	NEMA SIZE 4 CONTACTOR
11	1	ALLEN-BRADLEY	1492-FB3C30-L	CLASS CC 3 POLE FUSE HOLDER
12	1	ALLEN-BRADLEY	1492-FB2C30-L	CLASS CC 2 POLE FUSE HOLDER
13	3	ALLEN-BRADLEY	1492-FB1C30-L	CLASS CC 1 POLE FUSE HOLDER
14	1	ALLEN-BRADLEY	800T-QT10B	BLUE PUSH-TO-TEST INDICATOR LIGHT
15	1	ALLEN-BRADLEY	800T-QT10G	GREEN PUSH-TO-TEST INDICATOR LIGHT
16	1	ALLEN-BRADLEY	800T-QT10R	RED PUSH-TO-TEST INDICATOR LIGHT
17	–	---	---	---
18	1	ALLEN-BRADLEY	800T-J2B	3 POSITION SELECTOR SWITCH
19	–	---	---	---
20	–	---	---	---
21	1	ALLEN-BRADLEY	700-HA33A1	3-POLE RELAY – 120VAC
22	1	ALLEN-BRADLEY	700-HN126	11-PIN RELAY SOCKET
23	3	ALLEN-BRADLEY	700-HA32A1	2-POLE RELAY – 120VAC
24	3	ALLEN-BRADLEY	700-HN125	8-PIN RELAY SOCKET
25	1	ALLEN-BRADLEY	700-HR52TA17	TIMING OFF-DELAY RELAY
26	1	ALLEN-BRADLEY	700-HN126	11-PIN TIMING RELAY SOCKET
27	–	---	---	---
28	–	---	---	---
29	–	ALLEN BRADLEY	592-A2ME	CLASS 20 150:5 OVERLOAD RELAY 1N.O. – 1N.C.
30	–	---	---	---
31	1	ALLEN BRADLEY	150-F150NBD	SMD FLEX SOFT STARTER DRIVE
32	1	ALLEN BRADLEY	1202-H30	CONNECTION CABLE
33	1	ALLEN BRADLEY	20-HIM-A3	HMI FOR SMC DRIVE
34	10	BUSSMANN	ACG-XXA	1 1/4" X 1/4" GLASS FAST ACTING 24VDC FUSE
35	1	BURNDY	K4A29U-4N	MECHANICAL GROUND LUG
36	1	SQUARE D	PK5GTA	MECHANICAL GROUND BAR
37	2	BUSSMANN	MDL-XXA	250V 1 1/4" X 1/4" GLASS TIME DELAY FUSE
38	6	BUSSMANN	FNQ-R-XXA	CLASS CC TIME DELAY FUSE
39	1	BUSSMANN	AGC-XXA	250V 1 1/4" X 1/4" GLASS TIME DELAY FUSE
40	REQ	PHOENIX CONTACT	NS 35/7,5	DIN RAIL
41	12	PHOENIX CONTACT	E/NS 35 N	TERMINAL END BRACKETS
42	72	PHOENIX CONTACT	UK 5N	FEED THROUGH TERMINAL BLOCKS
43	8	PHOENIX CONTACT	UGLKG5	GROUND TERMINAL BLOCK
44	2	PHOENIX CONTACT	UK 6,3 HESI-LA	250V FUSED TERMINAL BLOCK
45	REQ	PANDUIT	F1X4LG6, C1LG6	1"X4" LIGHT GRAY WIRE DUCT W/ 1" COVER
46	REQ	PANDUIT	F2X4LG6, C2LG6	2"X4" LIGHT GRAY WIRE DUCT W/ 2" COVER
47	REQ	PANDUIT	F3X4LG6, C3LG6	3"X4" LIGHT GRAY WIRE DUCT W/ 3" COVER
48	1	CRAMER	635G	ELAPSED TIME METER
49	1	SYMCOM	MS777	MOTOR SAVER PROTECTIVE RELAY
50	3	INSTRUMENT TRANSFORMERS	5-SFT-151 **	150 TO 5 AMP CURRENT TRANSFORMER
51	–	---	---	---
52	1	ASCS	LAMACOID	2"X4" NAMEPLATE WHITE WITH BLACK LETTERS
53	6	ASCS	LAMACOID	1"X3" NAMEPLATE WHITE WITH BLACK LETTERS
54	LOT	BROTHERS	NAME ID	1/2"X1" WHITE TAPE BLACK LETTER NAME ID'S
55	1	ASCS	BRACKET	1" X 6" METAL L BRACKET STAND
56	1	CUTLER HAMMER	C320KGS41	1 N.O. AUXILARY CONTACT BASE
57	1	CUTLER HAMMER	KES3250LS1	ELECTRONIC TRIP UNIT 310
58	1	CUTLER HAMMER	A2KES250T1	ADJUSTABLE THERMAL MAGNETIC PLUG
59	–	---	---	---
60	–	---	---	---
61	2	BURNDY	BDB-22-350-3	POWER TERMINAL BLOCK
62	6	BURNDY	BDBCOVER1	FINGER SAFE TERMINAL COVER
63	–	---	---	---
64	–	---	---	---
65				

E4

TITLE: PINESTREET
PUMP CONTROL
PANEL ELEVATIONS & BILL OF MATERIALS

REV.	BY:	DATE:
A	JRJ	8/29/08

DWG BY: JRJ
DATE: 11/1/07
APPD BY: ROD ROBERTSON
JOB No: ----
SCALE: NONE
UL508 APPROVAL MFR# E164765
FILE NAME: BLUES\PINESTREET\E4
SHEET 1 OF 4

Alliance Service & Control Specialists
4846 S. 40Th. St. Phoenix, Az 85040
(602) 431-8434

PROJECT
CITY OF GLOBE
PINESTREET
ELECTRICAL UPGRADES

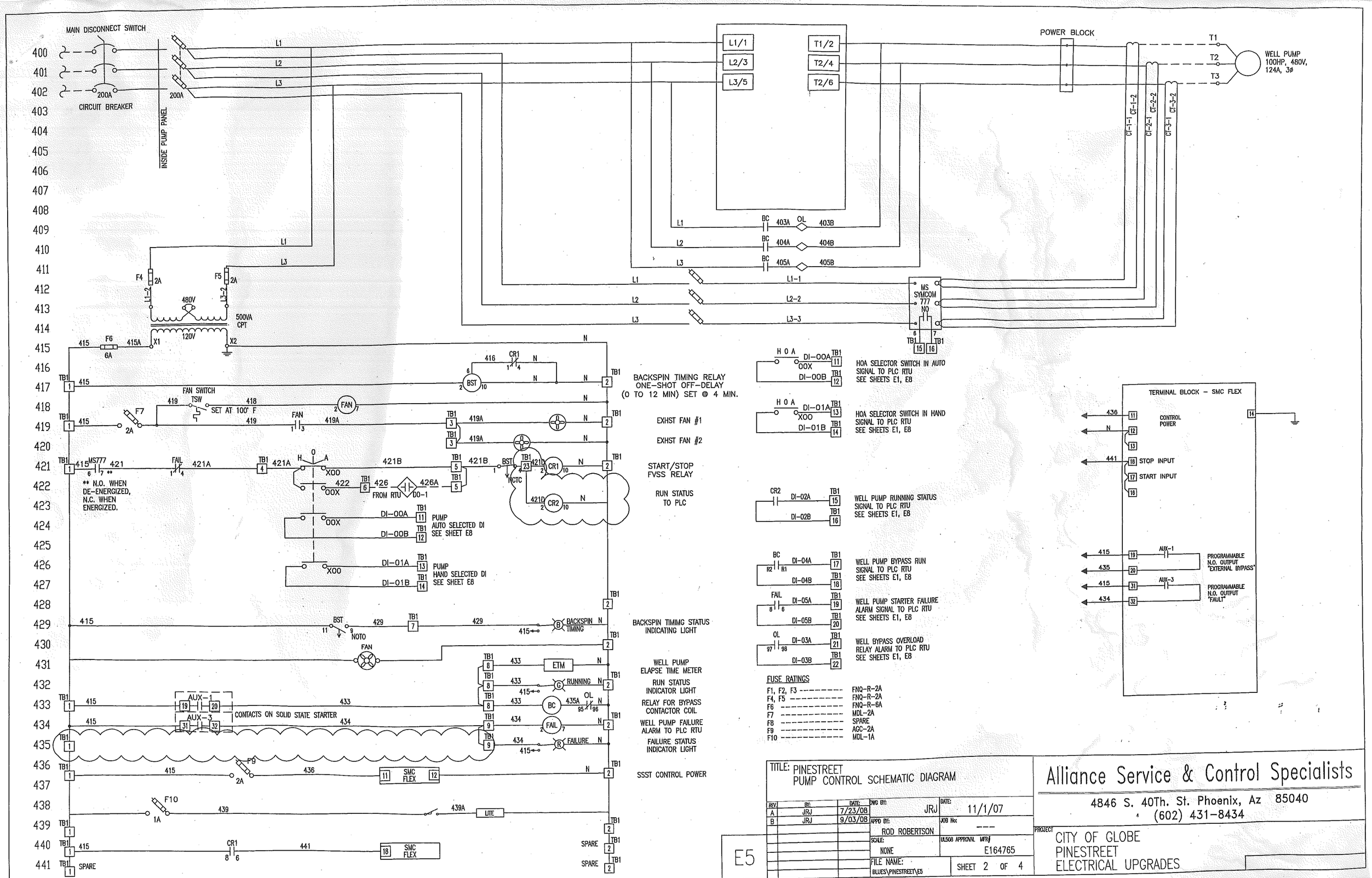

TITLE: PINESTREET
PUMP CONTROL SCHEMATIC DIAGRAM

REV.	BY:	DATE:
A	JRJ	7/23/08
B	JRJ	9/03/08

DWG BY: JRJ DATE: 11/1/07
APPD BY: ROD ROBERTSON JOB No: ---
SCALE: NONE UL508 APPROVAL MFR# E164765
FILE NAME: BLUES\PINESTREET\E5 SHEET 2 OF 4

E5

Alliance Service & Control Specialists
4846 S. 40Th. St. Phoenix, Az 85040
(602) 431-8434

PROJECT
CITY OF GLOBE
PINESTREET
ELECTRICAL UPGRADES

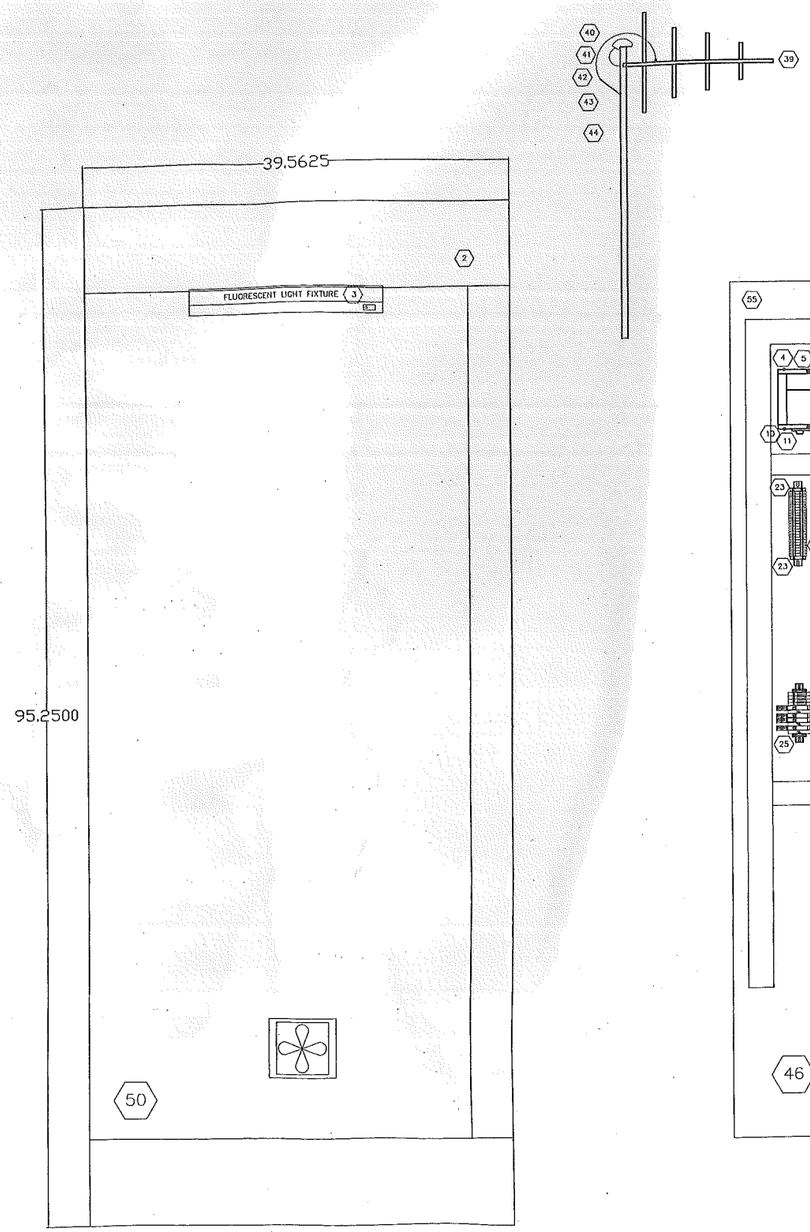

RTU CABINET ELEVATION

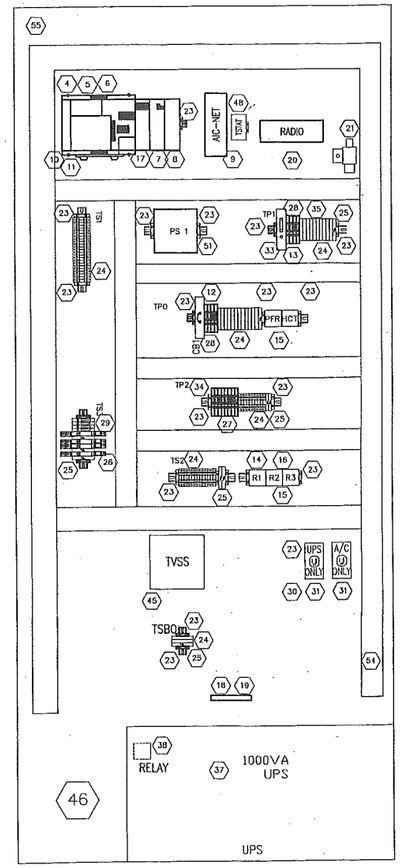

BACK PANEL ELEVATION

BILL OF MATERIALS

ITEM	QTY	MANUFACTURER	PART NUMBER	DESCRIPTION
1	1			
2	1	CUTLER HAMMER	MCC 1200	RELAY SECTION
3	1	HOFFMAN	ALF16D18R	FLOURESCENT LIGHTING PACKAGE
4	1	ALLEN-BRADLEY	1764-24BWA	MICROLOGIX 1500 BASE UNIT 120V CONTROLLER
5	1	ALLEN-BRADLEY	1764-LRP	1500 MICROLOGIX PROCESSOR
6	1	ALLEN-BRADLEY	1761-MM1	MEMORY MODULE
7	1	ALLEN-BRADLEY	1769-IF4	4 CHANNEL ANALOG INPUT MODULE
8	1	ALLEN-BRADLEY	1769-ECR	RIGHT END TERMINAL CAP
9	1	ALLEN-BRADLEY	1761-NET-AIC	DH485 PORT MODULE
10	1	ALLEN-BRADLEY	1761-CBL-AM00	COMMUNICATION CABLE
11	1	ALLEN-BRADLEY	1761-CABL-PM02	COMMUNICATION CABLE
12	1	ALLEN-BRADLEY	1492-SPU1C200	20A 1 POLE CIRCUIT BREAKER
13	1	ALLEN-BRADLEY	1492-FB1C30-L	1 POLE FUSE BLOCK
14	3	ALLEN-BRADLEY	700-HA33A24	24V DC 3 POLE RELAY
15	2	ALLEN-BRADLEY	700-HA32A1	2 POLE RELAY 120VAC COIL, 120VAC CONTACTS
16	5	ALLEN-BRADLEY	700-HN125	8-PIN RELAY SOCKET
17	1	ALLEN-BRADLEY	1769-IQ16	16 CHANNEL DISCRETE INPUT MODULE
18	1	BURNDY	K2A25U	MECHANICAL GROUND LUG
19	1	SQUARE D	PK7GTA	MECHANICAL GROUND BAR
20	1	MDS	9810	SPREAD SPECTRUM
21	1	POLYPHASER	IS-B50LN-C2	ANTENNA SURGE PROTECTOR
22	REQ	PHOENIX CONTACT	NS 35/7,5	DIN RAIL
23	25	PHOENIX CONTACT	E/NS 35 N	TERMINAL END BRACKETS
24	66	PHOENIX CONTACT	UK 5N	FEED THROUGH TERMINALS
25	5	PHOENIX CONTACT	UGLKL5	GROUND TERMINAL BLOCK
26	4	PHOENIX CONTACT	TT-2PE-24VDC	FUSED TERMINAL BLOCK
27	8	PHOENIX CONTACT	UK 6,3 HESIED24	24VDC FUSED TERMINAL BLOCK W/ INDICATOR
28	8	PHOENIX CONTACT	UK 6,3 HESIED250	250VAC FUSED TERMINAL BLOCK W/ INDICATOR
29	4	PHOENIX CONTACT	UT 4 HESILED24	24VDC FUSED TERMINAL BLOCK W/ INDICATOR
30	1	PHOENIX CONTACT	EM-DUL/120/15	TRACK MOUNTED DUPLEX RECEPTACLE 120V, 15A
31	2	HUBBEL	HBL5266C	PLUG NEMA 5-15P, 15A, 125VAC
32	REQ	BUSSMAN	SIZE AS REQUIRED	GLASS FUSE 250VAC
33	1	BUSSMAN	FNQ-R-10A	CLASS CC TIME DELAY FUSE
34	10	BUSSMAN	AGC-XXA	1/4" X 1 1/4" - 24VDC FAST ACTING FUSE
35	8	BUSSMAN	MDL-XXA	1/4" X 1 1/4" - TIME DELAY 120VAC FUSE
36	-	--	--	--
37	1	POWERWARE	PW 9120 1000	1000VA SMART-UPS
38	1	POWERWARE	1014018	UPS RELAY I/O MODULE AS/400
39	1	SCALA	TY-900	YAGI DIRECITIONAL ANTENNA
40	---	ANDREW	LDF4-50A	HELIAX 1/2" COAXIAL (IF OVER 50' NEED LARGER CABLE)
41	2	ANDREW	L4PNM-RC	1/2" - M - CONNECTORS
42	1	ANDREW	SGL4-0682	GROUND CONNECTOR KIT
43	1	ANDREW	246790	ANTENNA CABLE WEATHER KIT
44	1	THOMAS & BETTIS	SH-106	2" ANTENNA POLE WEATHERHEAD
45	1	NORTHERN TECH	TCS-HWR	TVSS SURGE SUPPRESSOR
46	1	HOFFMAN	TFP61	6" COMPOSITE FAN AND GRILL
47	1	HOFFMAN	TEP6	EXHAUST GRILL
48	1	HOFFMAN	ATEMNO	CABINET THERMOSTAT
49	1	HOFFMAN	CWHPTO	PADLOCK HANDLE
50	1	HOFFMAN	ADPI	SMALL DATA POCKET
51	1	IDEC	PS5R-D24	24VDC, 50W, POWER SUPPLY
52	REQ	ASCS	BROTHERS	LABELING TAPE FOR INTERNAL COMPONENTS
53	REQ	ASCS	LAMACOID	1" X 3" NAMEPLATES
54	REQ	PANDUIT	1.5X3 / 2X3	WIREWAY
55	1	ASCS	80'X33' BACK PANEL	CUSTOM BACK PANEL

TITLE: PINESTREET
RTU ELEVATIONS AND BILL OF MATERIALS

REV.	BY:	DATE:
A	JRJ	8/29/06

DWG BY: JRJ
DATE: 10/29/07
APPD BY: ROD ROBERTSON
JOB No: ----
SCALE: NONE
UL508 APPROVAL NO: E164765
FILE NAME: DRAWS\PINESTREET\E6
SHEET 3 OF 4

E6

Alliance Service & Control Specialists
4846 S. 40Th. St. Phoenix, Az 85040
(602) 431-8434

PROJECT
CITY OF GLOBE
PINESTREET
ELECTRCIAL UPGRADES

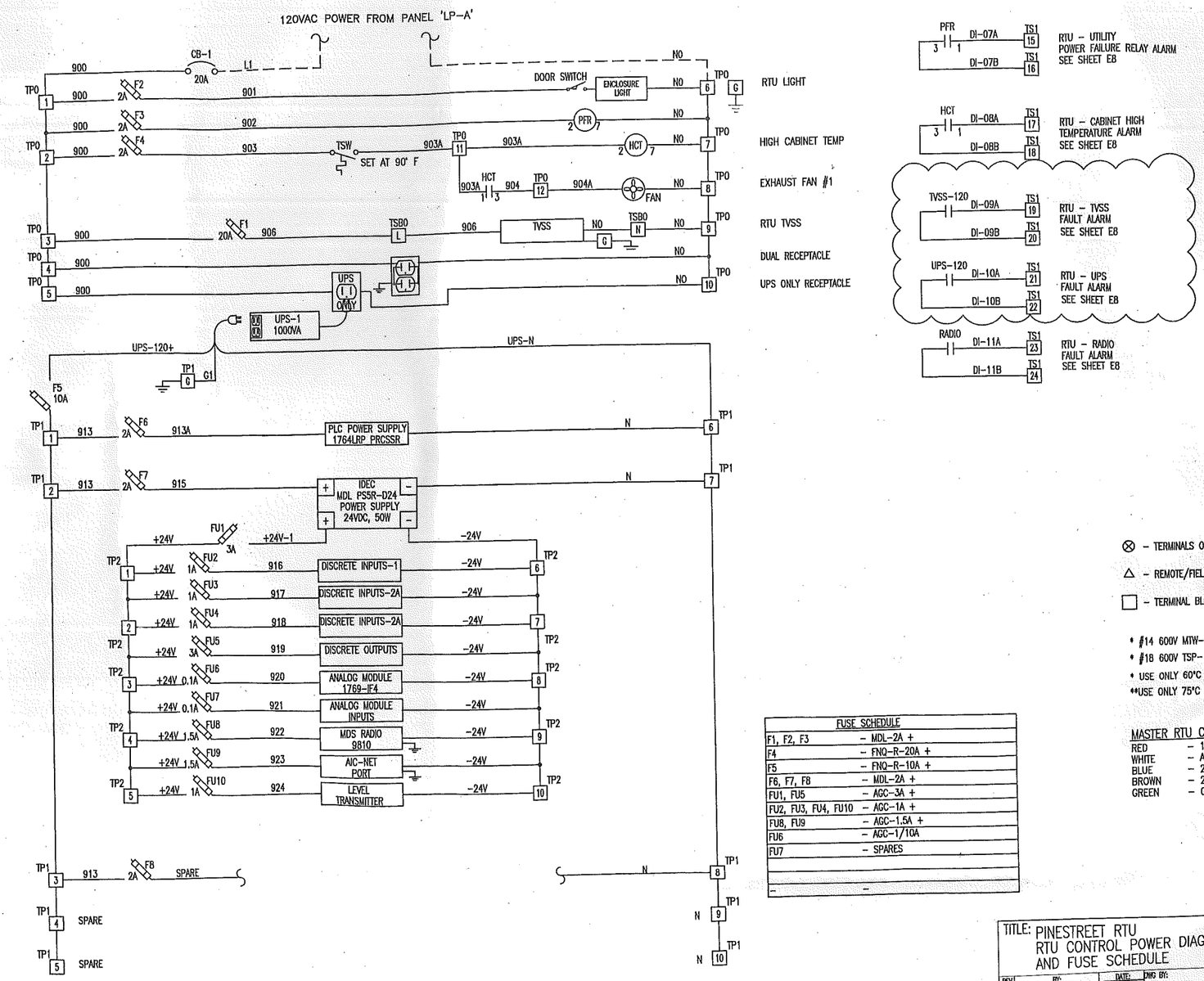

⊗ - TERMINALS ON FIELD DEVICES

△ - REMOTE/FIELD DEVICES

□ - TERMINAL BLOCKS

* #14 600V MTW- MINIMUM FOR CONTROL WIRING
* #18 600V TSP- MINIMUM FOR ANALOG SIGNALS
* USE ONLY 60°C COPPER WIRE FOR CONTROL
**USE ONLY 75°C COPPER WIRE FOR POWER WIRING

MASTER RTU CONTROL WIRING

RED	- 120V AC
WHITE	- AC NUETRAL
BLUE	- 24VDC POSITIVE
BROWN	- 24VDC NEGITIVE
GREEN	- GROUND

TERMINAL LEGEND
TP0 - 120VAC GENERAL POWER
TP1 - 120VAC UPS POWER
TP2 - 24VDC I/O CONTROL POWER
TS1 - 24VDC DISCRETE INPUTS
TS2 - 24VDC DISCRETE OUTPUT
TS3 - 24VDC ANALOG INPUT

FUSE SCHEDULE	
F1, F2, F3	- MDL-2A +
F4	- FNQ-R-20A +
F5	- FNQ-R-10A +
F6, F7, F8	- MDL-2A +
FU1, FU5	- AGC-3A +
FU2, FU3, FU4, FU10	- AGC-1A +
FU8, FU9	- AGC-1.5A +
FU6	- AGC-1/10A
FU7	- SPARES
-	-

TITLE: PINESTREET RTU
RTU CONTROL POWER DIAGRAM
AND FUSE SCHEDULE

REV.	BY:	DATE:
A	JRJ	8/29/08

DWG BY: JRJ	DATE: 10/12/07
APPD BY: ROD ROBERTSON	JOB No: ------
SCALE: NONE	UL508 APPROVAL MFR# E164765
FILE NAME: BLUES\PINESTREET\E7	SHEET 4 OF 4

E7

Alliance Service & Control Specialists
4846 S. 40Th. St. Phoenix, Az 85040
(602) 431-8434

PROJECT
CITY OF GLOBE
PINESTREET
ELECTRICAL UPGRADES

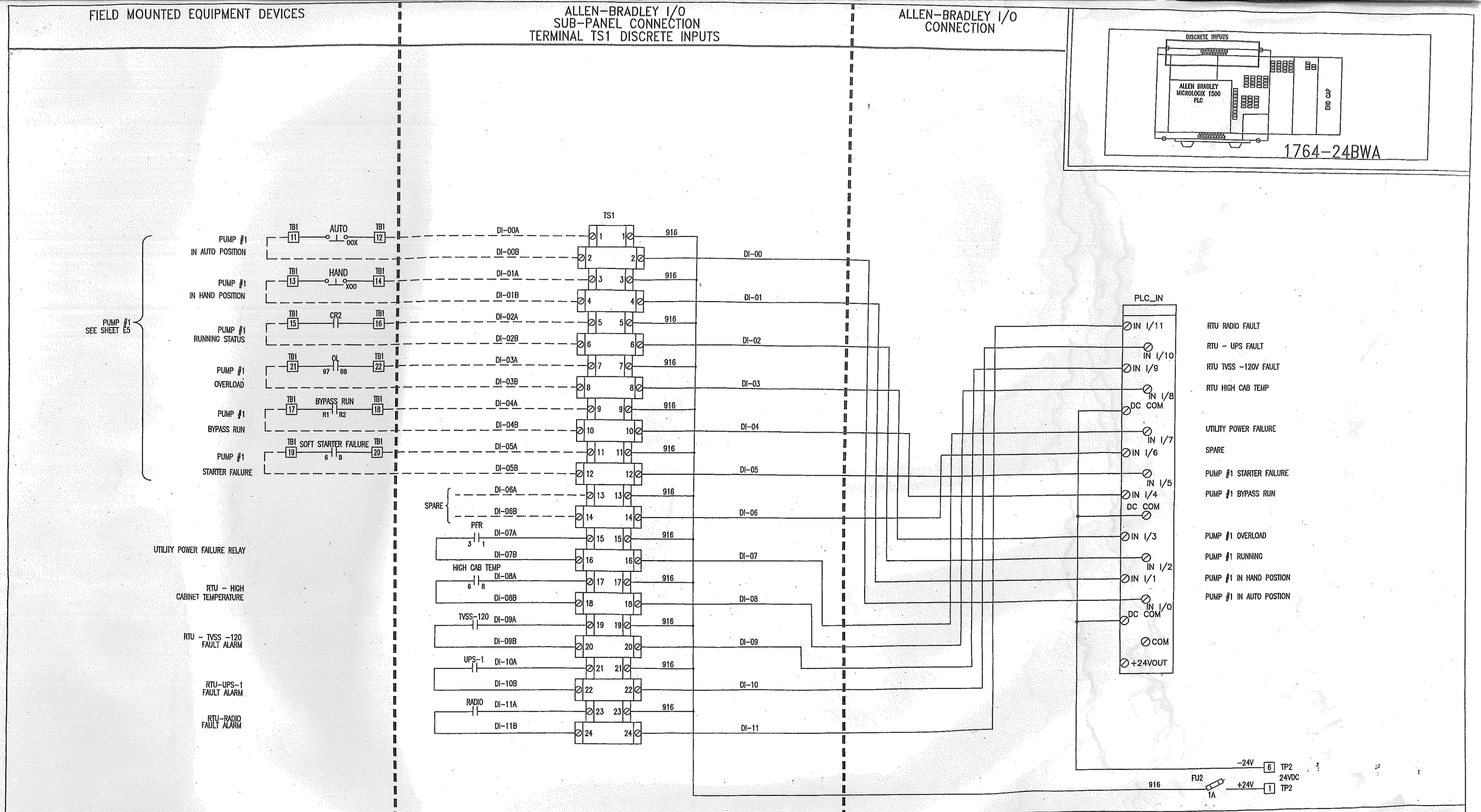

TITLE: PINESTREET
RTU DISCRETE INPUT CONTROLS
DI 1 - 24VDC

REV.	BY:	DATE:
A	---	---
B	---	---

DWG BY: JRJ
DATE: 10/29/07
APPD BY: ROD ROBERTSON
JOB No: ------
SCALE: NONE
UL508 APPROVAL MFR# E164765
FILE NAME: BLUES\PINESTREET\E8
SHEET 1 OF 4

E8

Alliance Service & Control Specialists
4846 S. 40Th. St. Phoenix, Az 85040
(602) 431-8434

PROJECT
CITY OF GLOBE
PINESTREET
ELECTRICAL UPGRADES

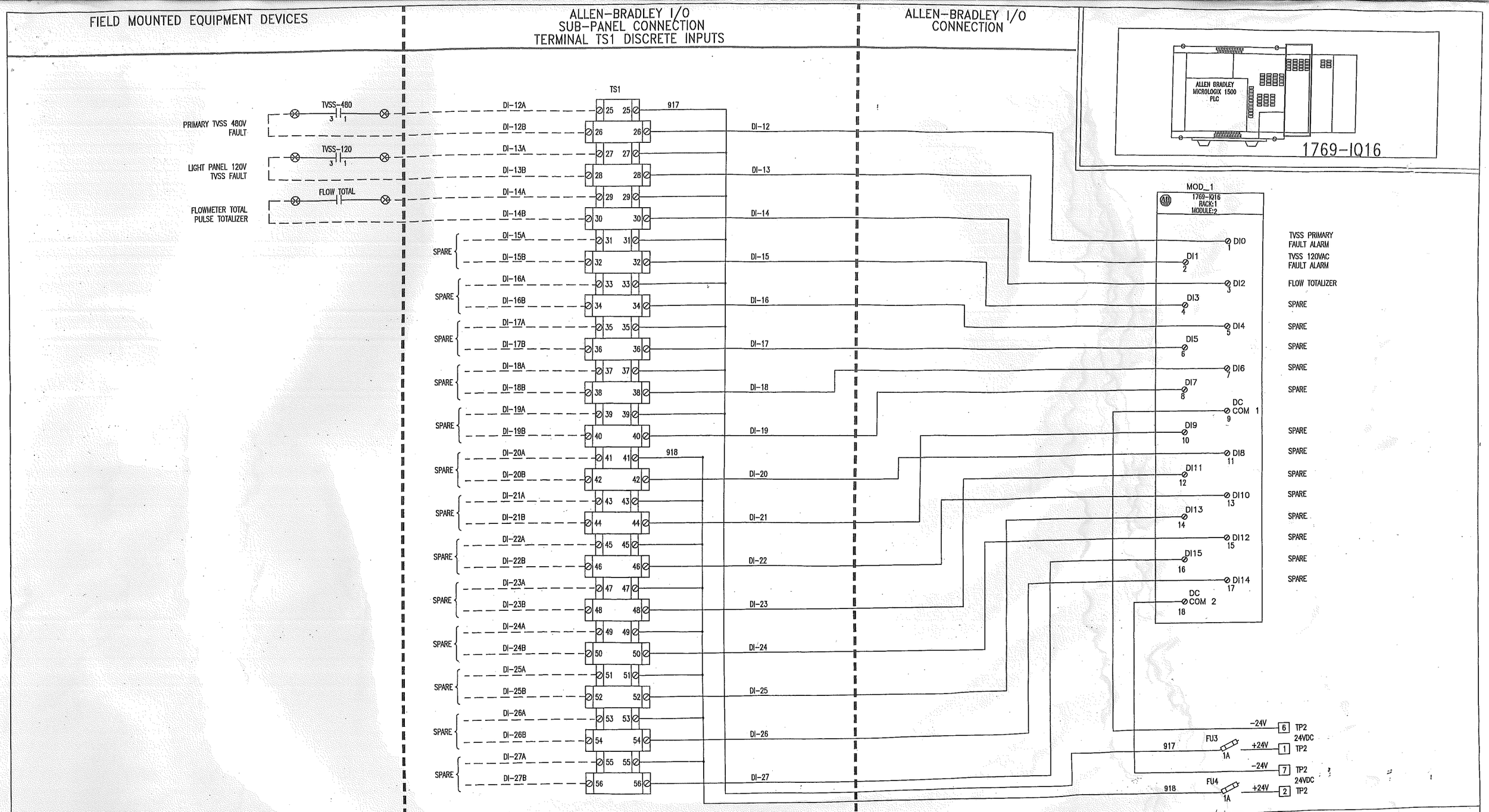

TITLE: PINESTREET
RTU DISCRETE INPUT CONTROLS
DI 2 - 24VDC

REV.	BY:	DATE:
A	---	---
B	---	---

DWG BY: JRJ
DATE: 10/30/07
APPD BY: ROD ROBERTSON
JOB No: -------
SCALE: NONE
UL508 APPROVAL MFR# E164765
FILE NAME: BLUES\PINESTREET\E9
SHEET 2 OF 4

E9

Alliance Service & Control Specialists
4846 S. 40Th. St. Phoenix, Az 85040
(602) 431-8434

PROJECT
CITY OF GLOBE
PINESTREET
ELECTRICAL UPGRADES

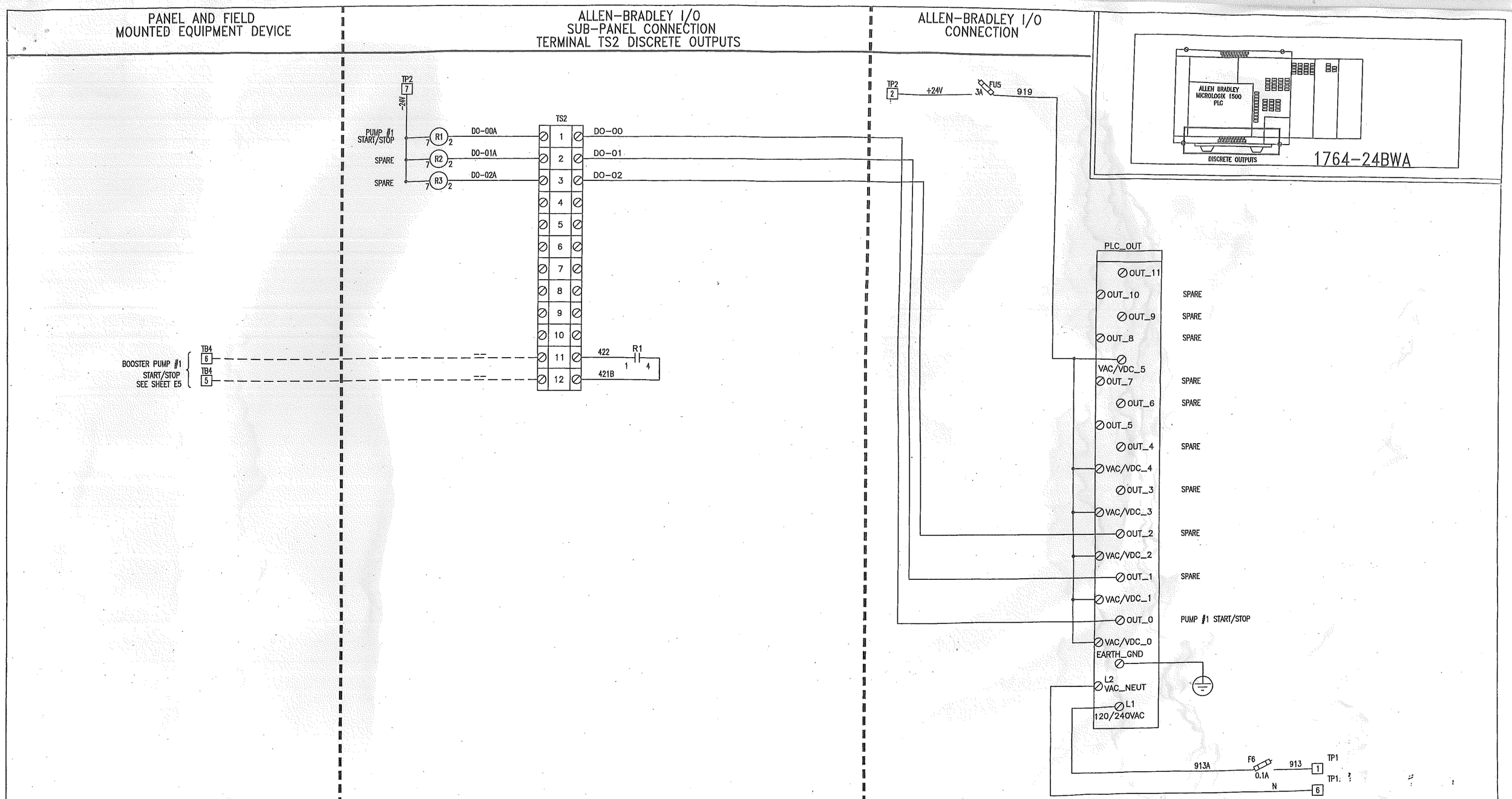

TITLE: PINESTREET
RTU DISCRETE OUTPUT CONTROLS
DO 1 – 24VDC

REV.	BY:	DATE:
A	---	---
B	---	---

DWG BY: JRJ
DATE: 10/11/07
APPD BY: ROD ROBERTSON
JOB No: -----
SCALE: NONE
UL508 APPROVAL MFR# E164765
FILE NAME: BLUES\PINESTREET\E10
SHEET 3 OF 4

E10

Alliance Service & Control Specialists
4846 S. 40Th. St. Phoenix, Az 85040
(602) 431-8434

PROJECT
CITY OF GLOBE
PINESTREET
ELECTRICAL UPGRADES

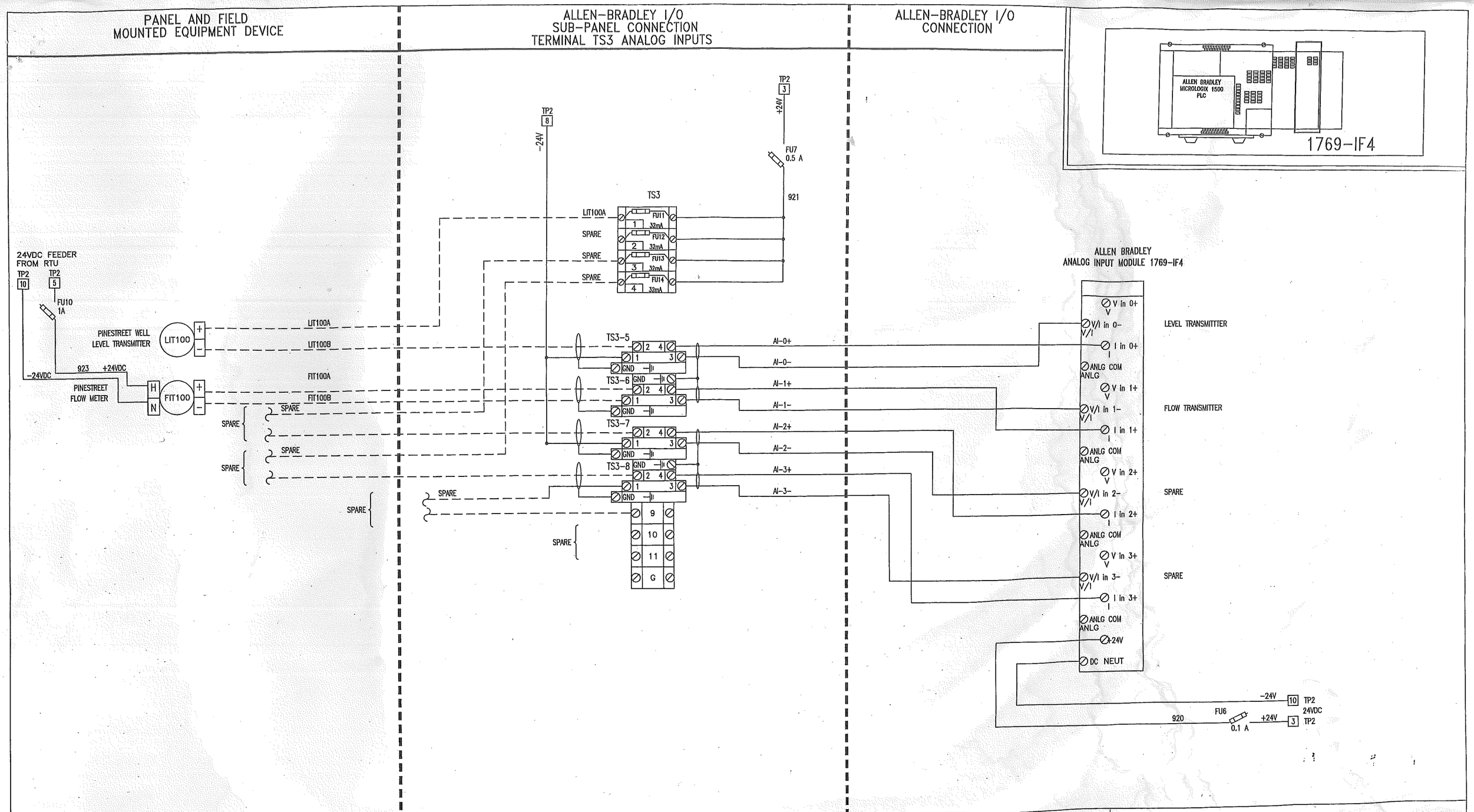

TITLE: PINESTREET
RTU ANALOG INPUT CONTROLS
AI 1 - 24VDC

REV	BY:	DATE:
A	---	---
B	---	---

DWG BY: JRJ
DATE: 10/29/07
APPD BY: ROD ROBERTSON
JOB No: --------
SCALE: NONE
UL508 APPROVAL MFR# E164765
FILE NAME: BLUES\PINESTREET\E11
SHEET 4 OF 4

E11

Alliance Service & Control Specialists
4846 S. 40Th. St. Phoenix, Az 85040
(602) 431-8434

PROJECT
CITY OF GLOBE
PINESTREET
ELECTRICAL UPGRADES

FRONT PANEL ELEVATION

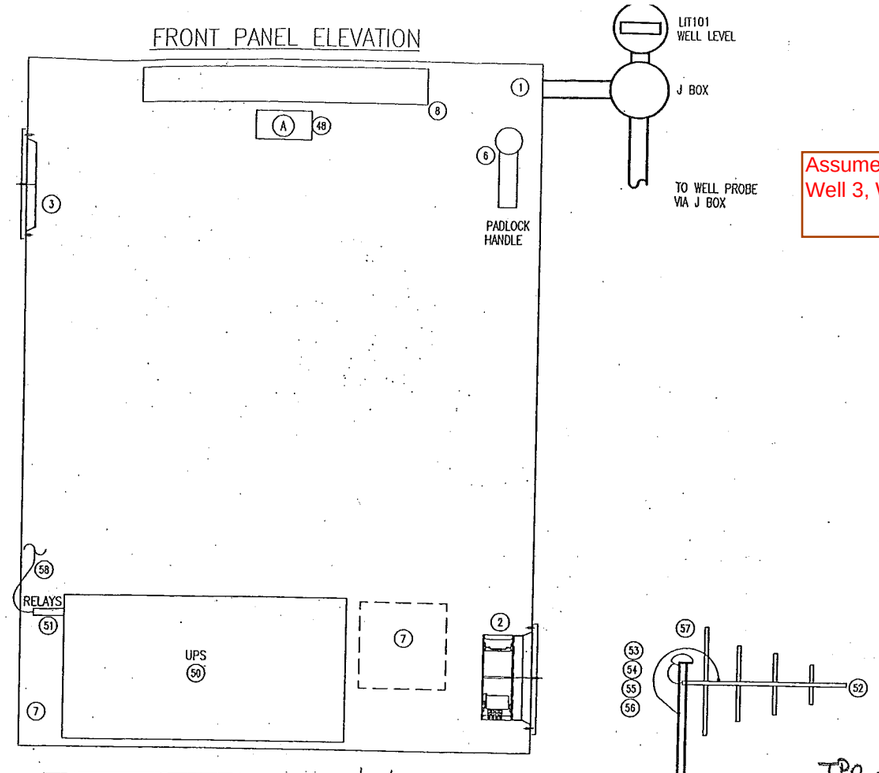

Assume this is typical for remote Well 1, Well 3, Well 4 and Well 5.

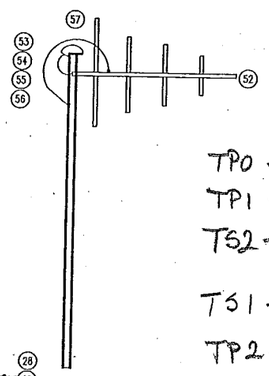

TP0 - (12 T.B. + 7 GRND #12 SPARE)
TP1 - (10) T.B
TS2 - (20 T.B.
TS1 - (28) DOUBLE T.B → 12 1/2"
TP2 - 10 T.B + 3 GRND
TS3 - 3 + 3 GR

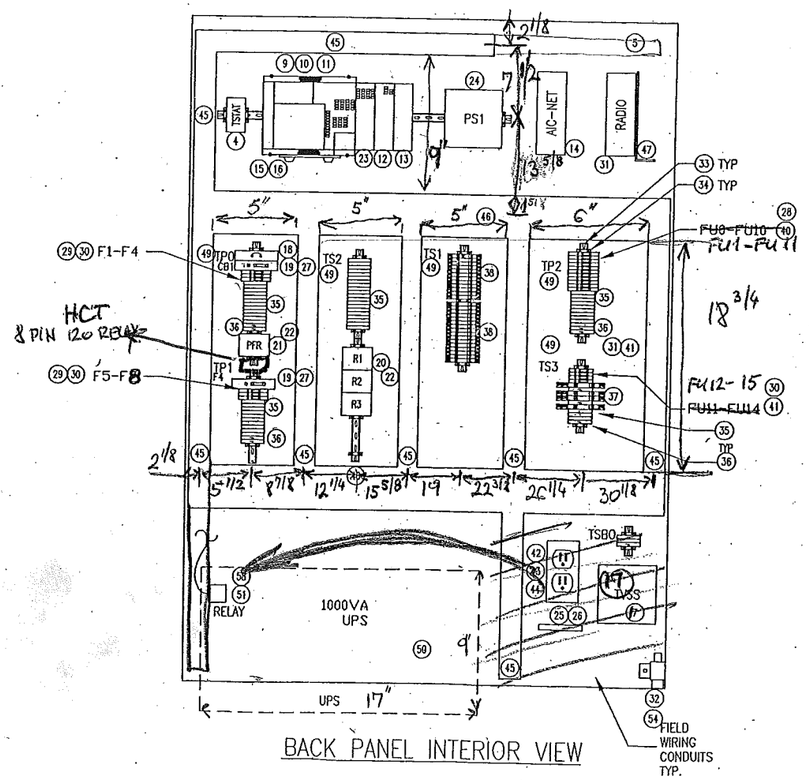

BACK PANEL INTERIOR VIEW

MORE NEED

BILL OF MATERIALS

ITEM	QTY	MANUFACTURER	PART NUMBER	DESCRIPTION
1	1	HOFFMAN	CSD483616"	WALL MOUNT CONCEPT ENCLOSURES
2	1	HOFFMAN	TFP61	6" COMPOSITE FAN AND GRILLE
3	1	HOFFMAN	TEP6	EXHAUST GRILLE
4	1	HOFFMAN	ATEMNO	CABINET THERMOSTAT
5	1	HOFFMAN	CP4836	BACK PANEL
6	1	HOFFMAN	CWHPTO	PADLOCK HANDLE
7	1	HOFFMAN	ADPI	SMALL DATA POCKET
8	1	HOFFMAN	ALF16D18R	18" CABINET LIGHT WITH MANUAL SWITCH AND BULB
9	1	ALLEN-BRADLEY	1764-24BWA	MICROLOGIX 1500 BASE UNIT 120V CONTROLLER
10	1	ALLEN-BRADLEY	1764-LRP	1500 MICROLOGIX PROCESSOR
11	1	ALLEN-BRADLEY	1761-MM1-RTC	MEMORY MODULE WITH REALTIME CLOCK
12	1	ALLEN-BRADLEY	1769-IF4	4 CHANNEL ANALOG INPUT MODULE
13	1	ALLEN-BRADLEY	1769-ECR	RIGHT END TERMINAL CAP
14	1	ALLEN-BRADLEY	1761-NET-AIC	DH485 PORT MODULE
15	1	ALLEN-BRADLEY	1761-CBL-AM00	COMMUNICATION CABLE
16	1	ALLEN-BRADLEY	1761-CABL-PM02	COMMUNICATION CABLE
17	1	NORTHERN TECH.	--- TCS-HWR	--- TVSS
18	1	ALLEN-BRADLEY	1492-SPU1C200	20A 1 POLE CIRCUT BREAKER
19	2	ALLEN-BRADLEY	1492-FB1C30-L	1-POLE FULSE BLOCK
20	3	ALLEN-BRADLEY	700-HA32Z24	24V DC 2 POLE RELAY
21	1	ALLEN-BRADLEY	700-HA32A1	2 POLE RELAY 120VAC COIL, 120VAC CONTACTS
22	4	ALLEN-BRADLEY	700-HN125	8-PIN RELAY SOCKET
23	1	ALLEN-BRADLEY	1769-IQ16	16 CHANNEL 24VDC DISCRETE INPUT MODULE
24	1	IDEC	PS5R-Q24	24VDC, 75W, POWER SUPPLY
25	1	BURNDY	K2A25U	MECHANICAL GROUND LUG
26	1	SQUARE D	PK5GTA	MECHANICAL GROUND BAR
27	2	BUSSMANN	FNQ-R-XXA	CLASS CC TIME DELAY FUSE
28	11	BUSSMANN	AGC-XXA	1/4"X1 1/4"-24VDC FAST ACTING GLASS FUSE
29	6	BUSSMANN	MDL-XXA	1/4"-1 1/4"-TIME DELAY 12VAC GLASS FUSE
30	4	FERRAZ-SHAWMUT	GSB-1/32A	5MMX20MM 32MA FAST ACTING GLASS FUSE
31	1	MDS	9810	SPREAD SPECTRUM RADIO
32	1	POLYPHASER	IS-B50LN-C2	ANTENNA SURGE PROTECTOR
33	11'	PHOENIX CONTACT	NS 35/7,5	DIN RAIL
34	22	PHOENIX CONTACT	~~ISAIS-35-N~~	TERMINAL END BRACKETS Raised
35	76	PHOENIX CONTACT	UK 5N	FEED THROUGH TERMINAL BLOCKS
36	9	PHOENIX CONTACT	USLKG5	GROUND TERMINAL BLOCK
37	4	PHOENIX CONTACT	TT-2PE-24VDC	SURGE TERMINAL BLOCK
38	14	PHOENIX CONTACT	(28) UKK5	DOUBLE STACK TERMINAL BLOCKS
39	6	PHOENIX CONTACT	UK 6,3 HESILA250	250VAC FUSED TERMINAL BLOCK W/INDICATOR
40	11	PHOENIX CONTACT	UK 6,3 HESILED24	24VDC FUSED TERMINAL BLOCK W/INDICATOR
41	4	PHOENIX CONTACT.	UT 4 HESILED24	UNIVERSAL 24VDC FUSED TERMINAL BLOCK W/INDICATOR
42	1	LEVITON	5362A-I	120V 20A DUPLEX RECEPTACLE
43	1	STEEL CITY	58-C-7	COVER PLATE
44	1	STEEL CITY	58361-1/2	2"X4" UTILITY BOX
45	20'	PANDUIT	F1.5X4LG6, C2LG6	1.5"X4" LIGHT GRAY WIRE DUCT W/ 2" COVER
46	6'	PANDUIT	F3X4LG6, C3LG6	3"X4" LIGHT GRAY WIRE DUCT W/ 3" COVER
47	1	ASCS	METAL L-BRACKET	RADIO STAND
48	1	ASCS	LAMACOID	2"X4" NAMEPLATE WHITE WITH BLACK LETTERS
49	LOT	BROTHERS	NAME ID	1/2"X1" WHITE TAPE BLACK LETTER NAME ID'S
50	1	POWERWARE	PW 9120 1000	1000 VA SMART-UPS
51	1	POWERWARE	101A018	UPS RELAY I/O MODULE AS/400
52	1	SCALA	TY-900	YAGI DIRECTIONAL ANTENNA
53	40'	ANDREW	LDF4-50A	HELIAX 1/2" COAXIAL CABLE
54	2	ANDREW	L4PNM-RC	1/2"-M-CONNECTORS
55	1	ANDREW	SGL4-06B2	GROUND CONNECTOR KIT
56	1	ANDREW-MTS	252133	ANTENNA CABLE WEATHER KIT
57	1	THOMAS & BETTS	SH-106	2" ANTENNA POLE WEATHERHEAD
58	1	ASCS		15 PIN ALARM COMMUNICATION CABLE
59	–	---	---	----
60	3	PHX CONT.	TYP D -DEK 1.5	SURGE TERM. BLOCK COVERS
61				
62				
63				
64				

+14

Registered Professional Engineer (Electrical) CERTIFICATE NO. 30538 JAMES BRIAN CAIN Date Signed 8/15/06 ARIZONA U.S.A.

04615-0

TITLE: CUTTER WELL #1 RTU ELEVATION VIEWS AND BILL OF MATERIALS

REV	BY:	DATE:
A	---	---

DWG BY: J.B.C. DATE: 08/14/06
APPD BY: TONY FISCHER JOB No: 04-615-W1
SCALE: NONE UL508 APPROVAL MFR# E164765
FILE NAME: BLUES\04615\CTRW1\RTU\ELEV SHEET 1 OF 6

E20

Alliance Service & Control Specialists
4846 S. 40Th. St. Phoenix, Az 85040
(602) 431-8434

PROJECT
CUTTER WELL FIELD
ELECTRICAL UPGRADES
GLOBE ARIZONA

CRCI
1047

Assume this is typical for remote Well 1, Well 3, Well 4 and Well 5.

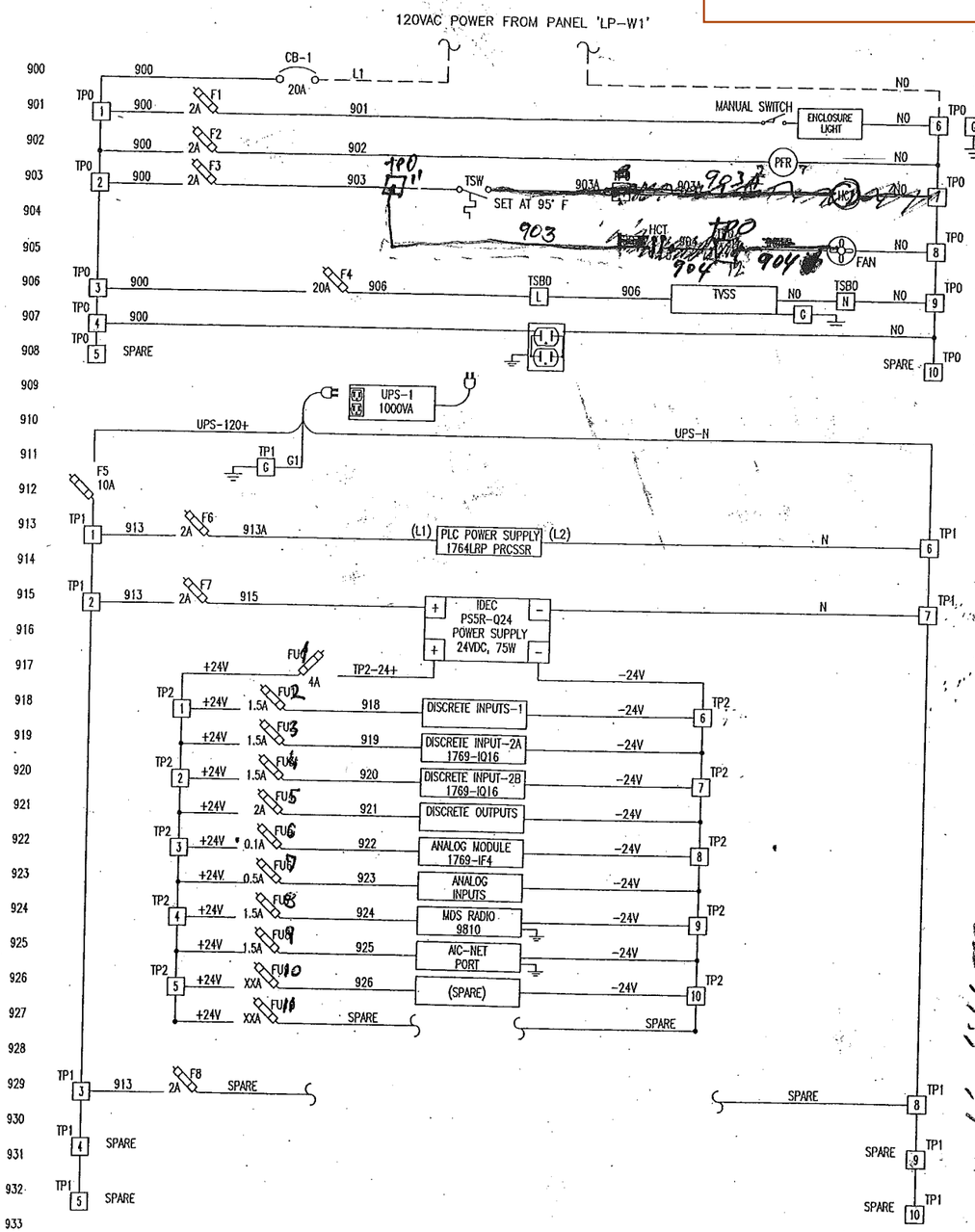

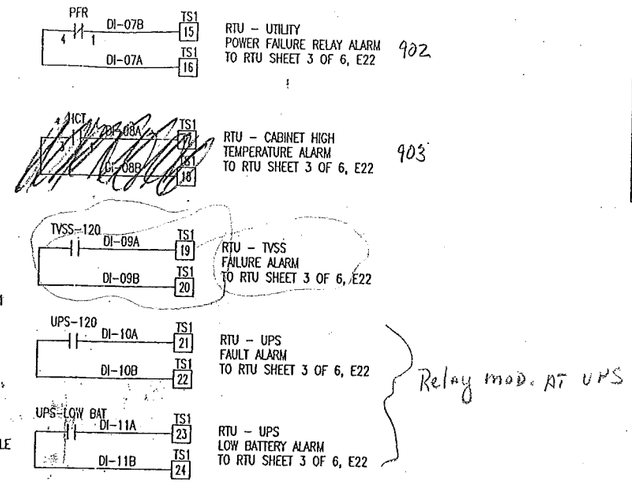

BILL OF MATERIALS

ITEM	MANUFACTURER	PART No.	DESCRIPTION
A	ASCS	ID	CUTTER WELL #1, RTU CABINET
B	–	–	–
C			
D			

FUSE SCHEDULE	
F1, F2, F3	– MDL-2A
F4	– FNQ-R-20A
F5	– FNQ-R-10A
F6, F7, F8	– MDL-2A
FU1	– AGC-4A
FU2	– AGC-2A
FU3, FU4, FU5	– AGC-1.5A
FU6, FU7	– AGC-1.5A
FU11 – FU14	– GSB-1/32A
FU8	– AGC-1/10A
FU9	– AGC-1/2A
FU10/FU11	– SPARES
–	–

⊗ – TERMINALS ON FIELD DEVICES

△ – REMOTE/FIELD DEVICES

□ – TERMINAL BLOCKS

* #14 600V MTW– MINIMUM FOR POWER WIRING
* #16 600V MTW– MINIMUM FOR CONTROL WIRING
* #18 600V TSP– MINIMUM FOR ANALOG SIGNALS
* USE ONLY 60°C COPPER WIRE FOR CONTROL
**USE ONLY 75°C COPPER WIRE FOR POWER WIRING

MASTER RTU CONTROL WIRING

RED	– 120V AC
WHITE	– AC NUETRAL
BLUE	– 24VDC POSITIVE
BROWN	– 24VDC NEGITIVE
GREEN	– GROUND

TERMINAL LEGEND
TP0 – 120VAC GENERAL POWER
TP1 – 120VAC UPS POWER
TP2 – 24VDC I/O CONTROL POWER
TS1 – 24VDC DISCRETE INPUTS
TS2 – 24VDC DISCRETE OUTPUT
TS3 – 24VDC ANALOG INPUT
TSB0 – 120VAC TVSS TERMINAL POWER

Registered Professional Engineer (Electrical)
CERTIFICATE NO. 30538
JAMES BRIAN CAIN
Date Signed 8/15/06
ARIZONA U.S.A.
04615-D

TITLE: CUTTER WELL #1 RTU CONTROL POWER DIAGRAM AND FUSE SCHEDULE

REV	BY:	DATE:
A	---	---

DWG BY: J.B.C. DATE: 08/14/06
APPD BY: TONY FISCHER JOB No: 04-615-W1
SCALE: NONE UL508 APPROVAL MFR# E164765
FILE NAME: BLUES\04615\CTRW1\RTU\PWR SHEET 2 OF 6

E21

Alliance Service & Control Specialists
4846 S. 40Th. St. Phoenix, Az 85040
(602) 431-8434

PROJECT
CUTTER WELL FIELD
ELECTRICAL UPGRADES
GLOBE ARIZONA

FIELD MOUNTED EQUIPMENT DEVICES

ALLEN-BRADLEY I/O
SUB-PANEL CONNECTION
TERMINAL TS1 DISCRETE INPUTS

ALLEN-BRADLEY I/O
CONNECTION

Assume this is typical for remote Well 1, Well 3, Well 4 and Well 5.

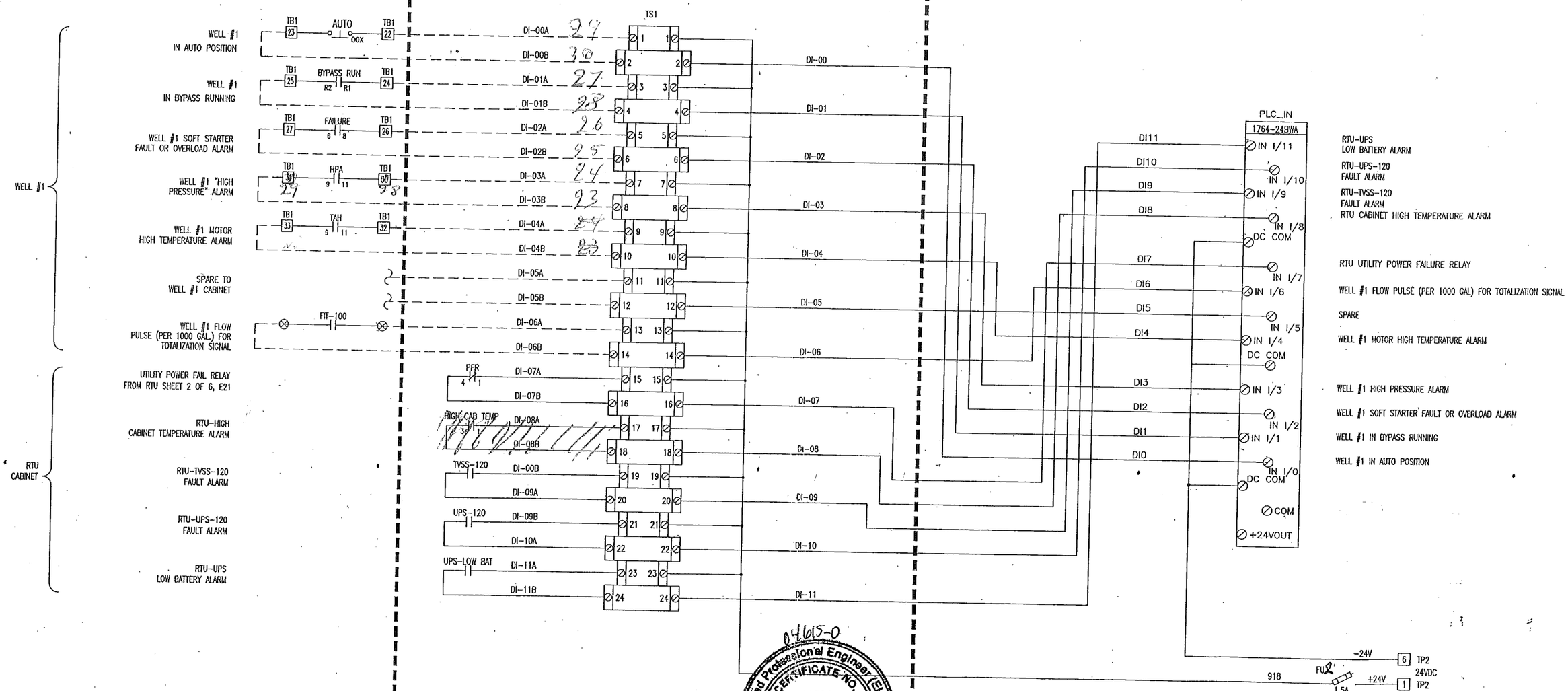

04615-0
Registered Professional Engineer (Electrical)
CERTIFICATE NO. 30538
JAMES BRIAN CAIN
Date Signed 8/15/06
ARIZONA, U.S.A.

E22

TITLE: CUTTER WELL #1 RTU
DISCRETE INPUT CONTROLS
DI 1 - 24VDC

REV.	BY:	DATE:
A	---	---
B	---	---

DWG BY: J.B.C.	DATE: 08/14/06
APPD BY: TONY FISCHER	JOB No: 04-615-W1
SCALE: NONE	UL508 APPROVAL MFR/ E164765
FILE NAME:	SHEET 3 OF 6

Alliance Service & Control Specialists
4846 S. 40Th. St. Phoenix, Az 85040
(602) 431-8434

PROJECT
CUTTER WELL FIELD
ELECTRICAL UPGRADES
GLOBE, ARIZONA

FIELD MOUNTED EQUIPMENT DEVICES

ALLEN-BRADLEY I/O
SUB-PANEL CONNECTION
TERMINAL TS1 DISCRETE INPUTS

ALLEN-BRADLEY I/O
CONNECTION

Assume this is typical for remote Well 1, Well 3, Well 4 and Well 5.

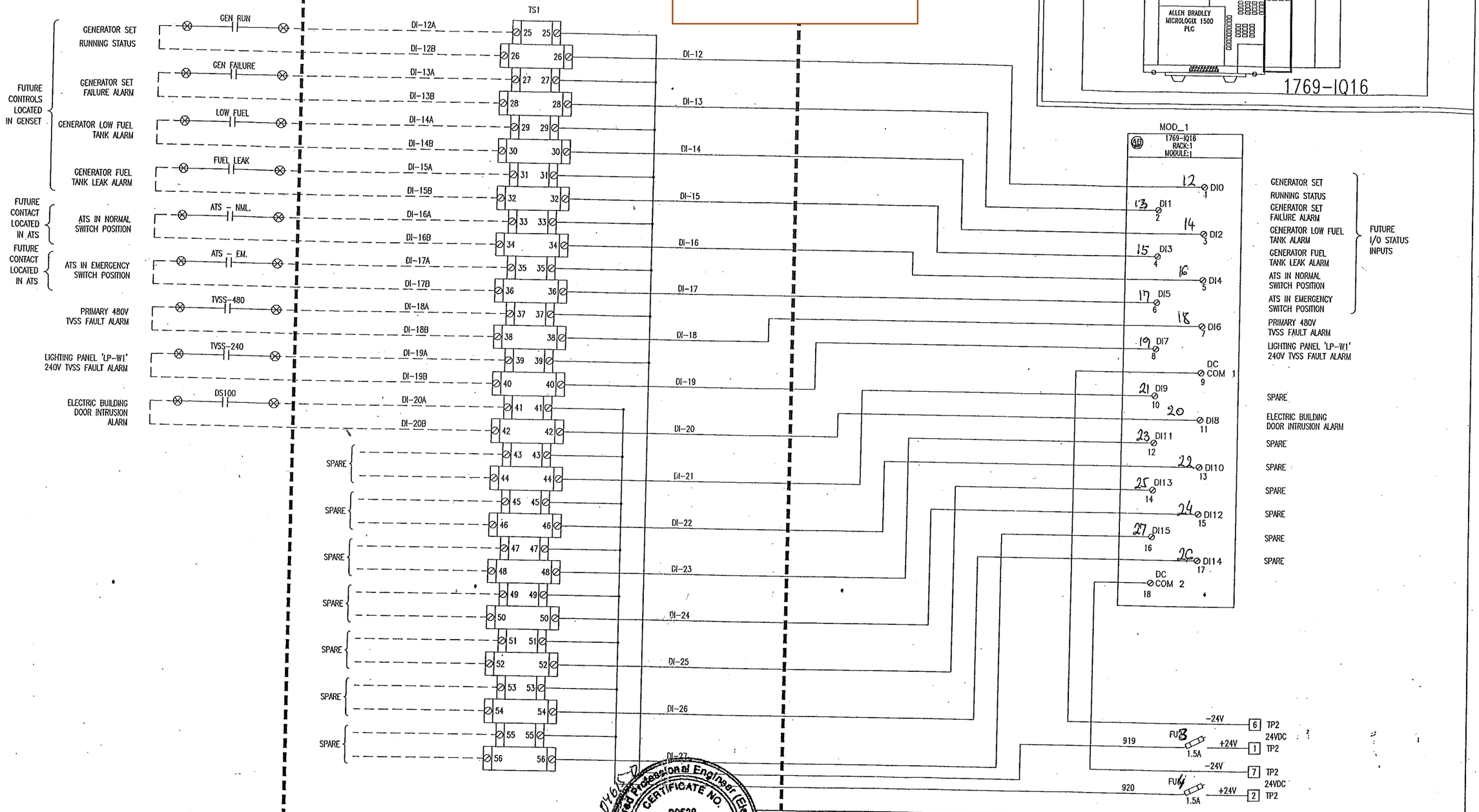

Registered Professional Engineer (Electrical)
CERTIFICATE NO. 30538
JAMES BRIAN CAIN
Date Signed 8/15/06
ARIZONA, U.S.A.

E23

TITLE: CUTTER WELL #1 RTU
DISCRETE INPUT CONTROLS
DI 2 - 24VDC

REV.	BY:	DATE:
A	---	---
B	---	---

DWG BY: J.B.C. DATE: 08/14/06
APPD BY: TONY FISCHER JOB No: 04-615--W1
SCALE: NONE UL508 APPROVAL MFR# E164765
FILE NAME: BLUES\04615\CTRW1\PRIO.DI2
SHEET 4 OF 6

Alliance Service & Control Specialists
4846 S. 40Th. St. Phoenix, Az 85040
(602) 431-8434

PROJECT
CUTTER WELL FIELD
ELECTRICAL UPGRADES
GLOBE, ARIZONA

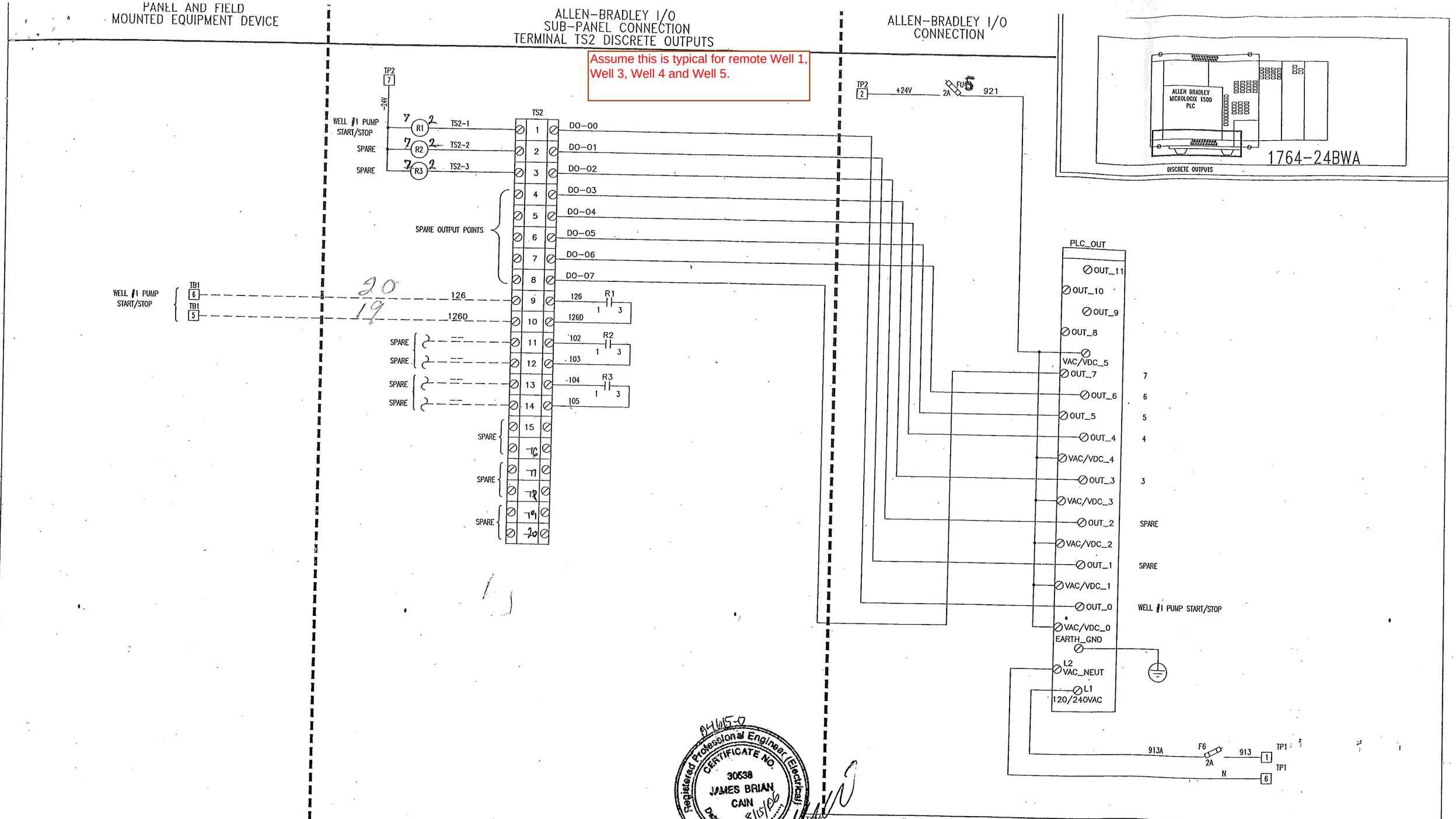

Registered Professional Engineer (Electrical) CERTIFICATE NO. 30538 JAMES BRIAN CAIN Date Signed 8/15/06 ARIZONA U.S.A.

TITLE: CUTTER WELL #1 RTU
DISCRETE OUTPUT CONTROLS
DO 1 – 24VDC

REV.	BY:	DATE:
A	---	---
B	---	---

DWG BY: J.B.C. DATE: 08/14/06
APPD BY: TONY FISCHER JOB No: 04-615-W1
SCALE: NONE UL508 APPROVAL NFR# E164765
FILE NAME:
SHEET 5 OF 6

E24

Alliance Service & Control Specialists
4846 S. 40Th. St. Phoenix, Az 85040
(602) 431-8434

PROJECT
CUTTER WELL FIELD
ELECTRICAL UPGRADES
CLORE ARIZONA

PANEL AND FIELD MOUNTED EQUIPMENT DEVICE

ALLEN-BRADLEY I/O SUB-PANEL CONNECTION TERMINAL TS3 ANALOG INPUTS

ALLEN-BRADLEY I/O CONNECTION

Assume this is typical for remote Well 1, Well 3, Well 4 and Well 5.

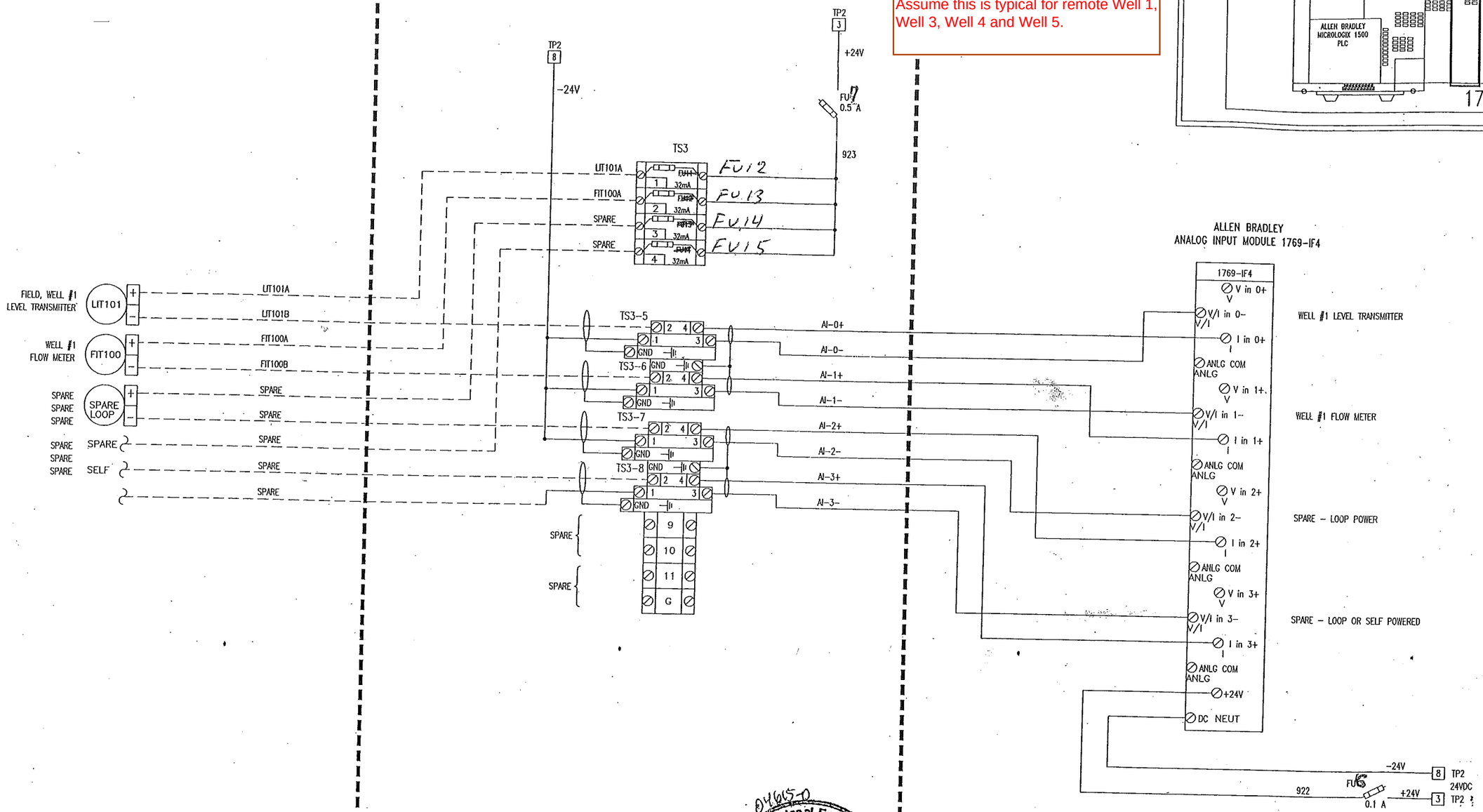

Registered Professional Engineer (Electrical) CERTIFICATE NO. 30538 JAMES BRIAN CAIN Date Signed 8/15/06 ARIZONA U.S.A.

04615-0

TITLE: CUTTER WELL #1 RTU ANALOG INPUT CONTROLS AI 1 - 24VDC

REV.	BY:	DATE:
A	---	---
B	---	---

DWG BY: J.B.C.	DATE: 08/14/06
APPD BY: TONY FISCHER	JOB No: 04-615-W1
SCALE: NONE	UL508 APPROVAL MFR: E164765
FILE NAME: BLUES\04615\CTRW1\RTUA.dwg	SHEET 6 OF 6

E25

Alliance Service & Control Specialists

4846 S. 40Th. St. Phoenix, Az 85040

(602) 431-8434

PROJECT: CUTTER WELL FIELD ELECTRICAL UPGRADES GLOBE, ARIZONA

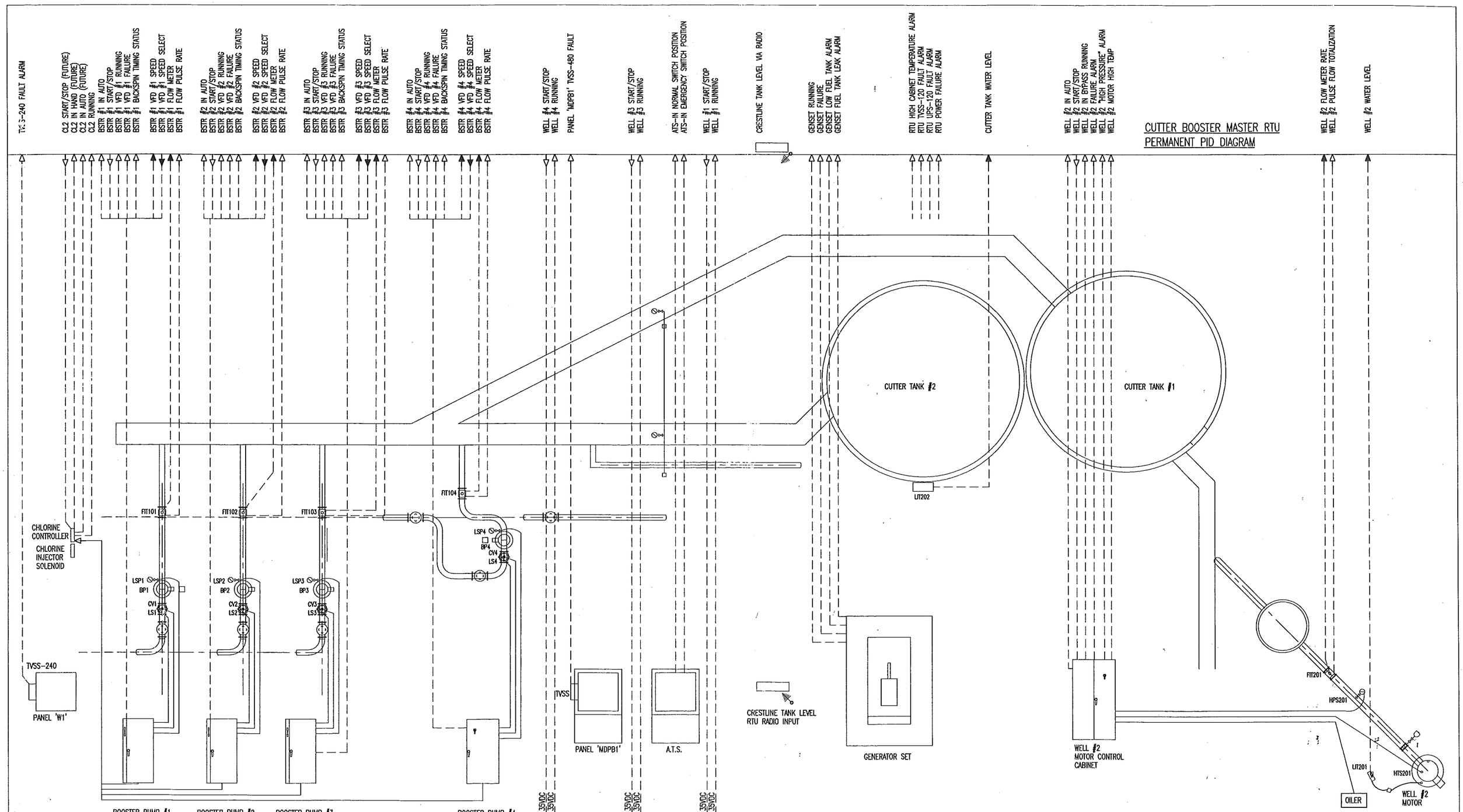

LS - LIMIT SWITCH
CV - CLA-VAL
BP - BOOSTER PUMP
LSP - LOW SUNCTION PRESSURE SWITCH
FIT - FLOW METER
LIT - LEVEL TRANSMITTER
HPS - PRESSURE SWITCH

TITLE: ELECTRICAL PID LOOP DIAGRAM
PERMANENT POWER
CUTTER MASTER RTU

REV.	BY:	DATE:
A	JBC	11/21/05
B	JBC	1/25/06
C	ASBUILTS	05/30/06
D	---	---

DWG BY: JBC
DATE: 12/20/04
APPD BY: TONY FISCHER
JOB No: 04-615-2
SCALE: NONE
UL508 APPROVAL MFR# E164765
FILE NAME: BLUES\05675\ASBILTS\RTUPID\1.dwg
SHEET 1 OF 12

E36

Alliance Service & Control Specialists
4846 S. 40Th. St. Phoenix, Az 85040
(602) 431-8434

PROJECT
CUTTER BOOSTERS - WELL #2
ELECTRICAL UPGRADES
GLOBE ARIZONA

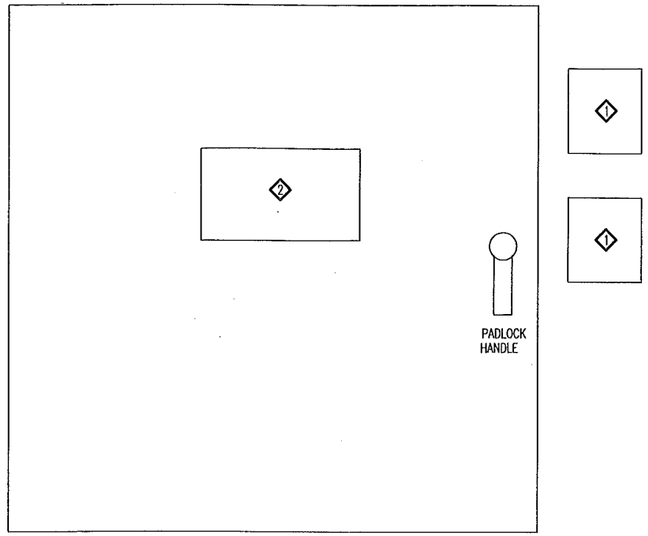

EXISTING PANEL ELEVATION VIEW

EXISTING BACK PANEL INTERIOR VIEW

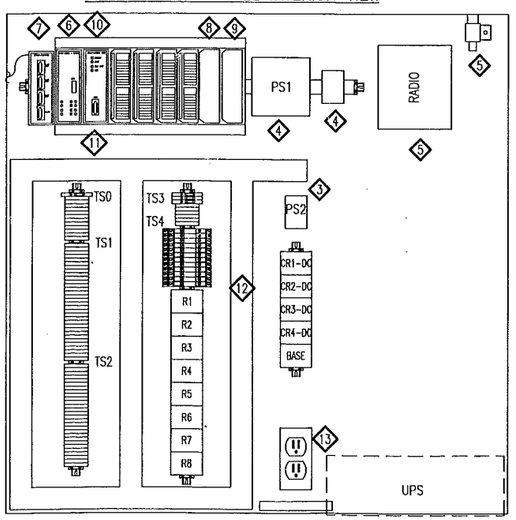

KEY CONSTRUCTION RTU NOTES:

1. REMOVE THE TWO UNUSED LEVEL / FLOAT SWITCHES AND CONDUIT AND CABLE AT THE WEST SIDE OF RTU.
2. REMOVE CABLE, POWER, AND PANEL VIEW 600. CUT A NEW ACCESS HOLE IN THE NEW RTU. RELOCATE THE EXISTING PANELVIEW 600 TO THE NEW RTU AND RECONNECT CABLES
3. RELOCATE POWER SUPPLY TRANSFORMER PS2 135VAC TO NEW RTU PANEL.
4. REMOVE 30W POWER SUPPLY AND POWER MONITOR RELAY, SALVAGE TO THE OWNER
5. RELOCATE THE EXISTING RADIO, RADIO ANTENNA SURGE ARRESTER, AND CABLES TO THE NEW PERMANENT RTU CABINET. INSTALL NEW CABLE AND POWER TO THE DEVICES
6. REMOVE THE OLD 7 SLOT CHASSIS AND INSTALL NEW 10 SLOT CHASSIS FOR THE NEW PLC REMOVE THE EXISTING PLC POWER SUPPLY P2, AND INSTALL NEW POWER SUPPLY P4.
7. REMOVE THE ALLEN-BRADLEY 1747-AIC INTERFACE MODULE FOR THE PANELVIEW, PLC, AND REMOTE CONTROL CONSOL PC COMPUTER INTERFACE. RELOCATE WITH CABLES TO THE NEW RTU CABINET
8. INSTALL NEW I/O MODULES ONTO THE NEW 10 SLOT CHASSIS IN POSITIONS 5, & 6 OF THE NEW PLC AS DI-2 AND AI-2. INSTALL A NEW BLANK SPOT IN POSITION 7.
9. RELOCATE THE TWO EXISTING BLANK SLOT MODULES IN SLOTS 8 & 9 OF THE NEW RTU.
10. RELOCATE THE EXISTING CPU UNIT, TO THE NEW PLC RTU CABINET. THE EXISTING ORDER OF 120VDI, 120VDO, 24VAI AND AO IS TO BE MAINTAINED WITHIN THE NEW PLC CHASSI TO MAINTAIN EXISTING EQUIPMENT ADDRESSES FOR THE PROGRAM.
11. WIRE THE NEW PLC MODULES AND NEW TERMINALS FOR BOOSTER, #2 & #3 AND TH E FIELD DEVICES FOR THE TEMPORARY OPERATIONS. WIRE BOOSTER #1 AND #4, WELL #2, AND REWIRE BOOSTER #2 AND #3 WITH FIELD DEVICES FOR THE PERMANENT OPERATIONS.
12. RE-ENERGIZE SYSTEM. TEST FOR AUTOMATIC OPERATION. MAINTAIN OPERATIONS TO TO WELL 1, 3, AND 4. COORDINATE THE PLC PROGRAMMING WITH SYSTEM INTEGRATOR, ALLIANCE SERVICE AND CONTROL SPECIALISTS, INC. AT 602-431-8434 (O), 602-431-8482 (F), 4846 SOUTH 40TH STREET PHOENIX ARIZONA 85040.
13. SALVAGE ALL OLD UNUSED RTU EQUIPMENT TO OWNER FOR SPARE DEVICES. (12 RELAYS, DI, DO, AI, AO, MODULES, CABINET, TERMINALS, UPS, ECT.)

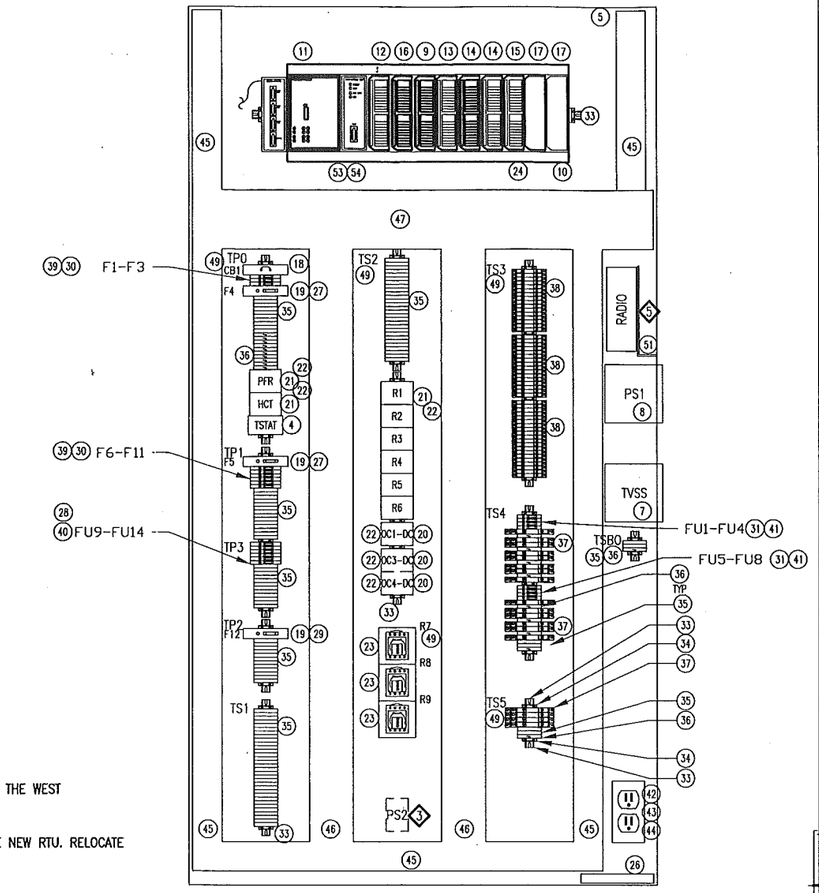

BACK PANEL INTERIOR VIEW

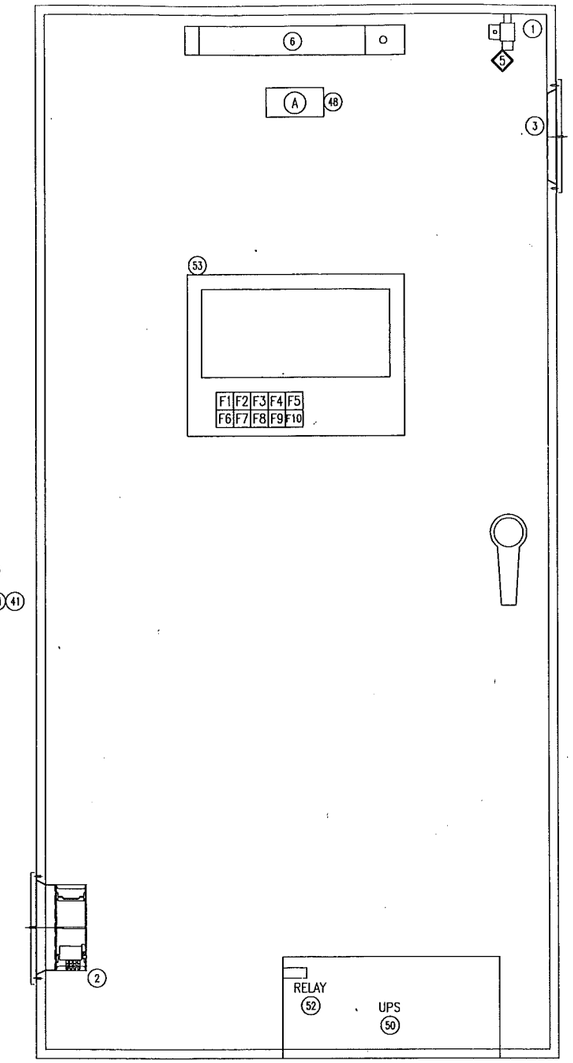

FRONT PANEL ELEVATION

TITLE: MASTER RTU SCHEMATIC CONTROLS ELEVATION AND CONSTRUCTION NOTES PERMANENT POWER				
REV.	BY:	DATE:	DWG BY: J.B.C.	DATE: 12/20/04
A	JBC	9/20/05		
B	JBC	11/21/05	APPD BY: TONY FISCHER	JOB No: 04-615-2
C	JBC	1/25/06		
D	ASBUILTS	05/30/06	SCALE: NONE	UL508 APPROVAL MFR# E164765
E	---	---		
			FILE NAME: BLUES\05675\ASBLTS\RTUELEV\2.dwg	SHEET 2 OF 12

E37

Alliance Service & Control Specialists
4846 S. 40Th. St. Phoenix, Az 85040
(602) 431-8434

PROJECT
CUTTER BOOSTERS - WELL #2
ELECRICAL UPGRADES
GLOBE, ARIZONA

BILL OF MATERIALS

ITEM	QTY	MANUFACTURER	PART NUMBER	DESCRIPTION
1	1	HOFFMAN	A723618FS	FREE STANDING ENCLOSURE
2	1	HOFFMAN	TFP61	6" COMPOSITE FAN AND GRILLE
3	1	HOFFMAN	TEP6	EXHAUST GRILLE
4	1	HOFFMAN	ATEMNO	CABINET THERMOSTAT
5	1	HOFFMAN	A72P36F1	BACK PANEL
6	1	HOFFMAN	ALF16D18R	18" CABINET LIGHT W/DOOR SWITCH
7	1	NORTHERN TECHNOLOGY	TCS-TWR	120VAC RTU TVSS UNIT
8	1	IDEC	PS5R-Q24	24VDC, 75W, POWER SUPPLY
9	1	ALLEN-BRADLEY	1746-IB16	24VDC 16 DISCRETE INPUT MODULE
10	1	ALLEN-BRADLEY	1746-A10	10 SLOT PLC RACK
11	1	ALLEN-BRADLEY	1746-P4	POWER SUPPLY FOR SLC 5/03
12	1	ALLEN-BRADLEY	1746-IA16	120VAC 16 DISCRETE INPUT MODULE
13	1	ALLEN-BRADLEY	1746-OA16	120VAC 16 DISCRETE OUTPUT MODULE
14	2	ALLEN-BRADLEY	1746-NI8	24VDC 8 ANALOG INPUT MODULE
15	1	ALLEN-BRADLEY	1746-NO4I	24VDC 4 ANALOG OUTPUT MODULE
16	1	ALLEN-BRADLEY	1746-IB32	24VDC 32 DISCRETE INPUT MODULE
17	2	ALLEN-BRADLEY	1746-N2	CARD SLOT FILLER
18	1	ALLEN-BRADLEY	1492-SPUIC200	20A 1 POLE CIRCUT BREAKER
19	3	ALLEN-BRADLEY	1492-FB1C30-L	1-POLE FULSE BLOCK
20	3	ALLEN-BRADLEY	700-HA32Z3-4	2 POLE RELAY-140VDC COIL, 120VAC CONTACT
21	8	ALLEN-BRADLEY	700-HA32A1-4	2 POLE RELAY 120VAC COIL, 120VAC CONTACTS
22	11	ALLEN-BRADLEY	700-HN125	8-PIN RELAY SOCKET
23	3	ALLEN-BRADLEY	700-HG42A1-6	140VDC CONTACT 120VAC COIL POWER RELAY W/MAG BLOWOUTS
24	1	ALLEN-BRADLEY	1746-CABLE010N3	32-PIN I/O INTERCONNECT CABLE
25	–	---	---	---
26	1	SQUARE D	PK5GTA	MECHANICAL GROUND BAR
27	2	BUSSMANN	FNQ-R-10A	CLASS CC TIME DELAY FUSE
28	6	BUSSMANN	AGC-XXA	1/4"X1 1/4"-24VDC FAST ACTING GLASS FUSE
29	1	BUSSMANN	LP-CC-1/2A	13/32"-1 1/2"-1/2A 150VDC TIMEDELAY CLASS CC FUSE
30	9	BUSSMANN	MDL-XXA	1/4"-1 1/4"-TIME DELAY 12VAC GLASS FUSE
31	8	FERRAZ-SHAWMUT	GSB 1/32A	5MMX20MM 32MA FAST ACTING GLASS FUSE
32	–	---	---	----
33	13'	PHOENIX CONTACT	NS 35/7,5	DIN RAIL
34	28	PHOENIX CONTACT	E/NS 35 N	TERMINAL END BRACKETS
35	114	PHOENIX CONTACT	UK 5N	FEED THROUGH TERMINAL BLOCKS
36	20	PHOENIX CONTACT	USLKG 5	GROUND TERMINAL BLOCK
37	18	PHOENIX CONTACT	TT-2PE-24VDC	SURGE TERMINAL BLOCK
38	52	PHOENIX CONTACT	UKK5	DOUBLE STACK TERMINAL BLOCK
39	9	PHOENIX CONTACT	UK 6,3 HESILA250	250VAC FUSED TERMINAL BLOCK W/INDICATOR
40	6	PHOENIX CONTACT	UK 6,3 HESILED24	24VDC FUSED TERMINAL BLOCK W/INDICATOR
41	8	PHOENIX CONTACT	UT 4 HESILED24	UNIVERSAL 24VDC FUSED TERMINAL BLOCK W/INDICATOR
42	1	LEVITON	5362A-I	120V 20A DUPLEX RECEPTACLE
43	1	STEEL CITY	58-C-7	COVER PLATE
44	1	STEEL CITY	58361-1/2	2"X4" UTILITY BOX
45	16'	IBOCO	T1E-2240	2"X4" LIGHT GRAY WIRE DUCT W/ 2" COVER
46	8'	IBOCO	T1E-3040	3"X4" LIGHT GRAY WIRE DUCT W/ 3" COVER
47	3'	IBOCO	T1E-4040	4"X4" LIGHT GRAY WIRE DUCT W/ 4" COVER
48	1	ASCS	LAMACOID	2"X4" NAMEPLATE WHITE WITH BLACK LETTERS
49	LOT	BROTHERS	NAME ID	1/2"X1" WHITE TAPE BLACK LETTER NAME ID'S
50	1	POWERWARE	9120 1000	120VAC 1000 VA SMART UPS
51	1	ASCS	---	L-BRACKET
52	1	POWERWARE	10104018	AS/400 RELAY CARD
53	1	ALLEN-BRADLEY	9324-RL0300ENE	PROGRAMMING SOFTWARE
54	1	ALLEN-BRADLEY	93012SE2204	PROGRAMMING SOFTWARE
55				
56				
57				
58				
59				
60				
61				
62				
63				
64				

BILL OF MATERIALS

ITEM	MANUFACTURER	PART No.	DESCRIPTION
A	ASCS	ID	CUTTER MASTER RTU CABINET
B	–	–	–
C			
D			

⊗ – TERMINALS ON FIELD DEVICES

△ – REMOTE/FIELD DEVICES

□ – TERMINAL BLOCKS

* #16 600V MTW– MINIMUM FOR CONTROL WIRING
* #18 600V TSP– MINIMUM FOR ANALOG SIGNALS
* USE ONLY 60°C COPPER WIRE FOR CONTROL
**USE ONLY 75°C COPPER WIRE FOR POWER WIRING

MASTER RTU CONTROL WIRING

RED – 120V AC
WHITE – AC NUETRAL
BLUE – 24VDC POWER AND CONTROL
GREEN – GROUND
PURPLE – 135VDC POWER AND CONTROL

TERMINAL LEGEND
TP0 – 120VAC GENERAL POWER
TP1 – 120VAC UPS POWER
TP2 – 135VDC WELL CONTROL POWER
TP3 – 24VDC CONTROL POWER
TS1 – 120VAC DISCRETE INPUT – 1
TS2 – 120VAC DISCRETE OUTPUT
TS3 – 24VDC DISCRETE INPUT – 2
TS4 – 24VDC ANALOG INPUT
TS5 – 24VDC ANALOG OUTPUT

TITLE: MASTER RTU SCHEMATIC CONTROLS
BILL OF MATERIALS & TERMINAL LEGEND
PERMANENT RTU

REV.	BY:	DATE:
A	JBC	9/20/05
B	JBC	11/21/05
C	JBC	1/25/06
D	ASABUILTS	05/30/06
E	---	---

DWG BY: J.B.C. DATE: 12/20/04
APPD BY: TONY FISCHER JOB No: 04-615-2
SCALE: NONE UL508 APPROVAL MFR# E164765
FILE NAME: BLUES\05675\ASBLTS\RTUBOM\3.dwg SHEET 3 OF 12

E38

Alliance Service & Control Specialists
4846 S. 40Th. St. Phoenix, Az 85040
(602) 431-8434

PROJECT
CUTTER BOOSTERS – WELL #2
ELECTRICAL UPGRADES
GLOBE ARIZONA

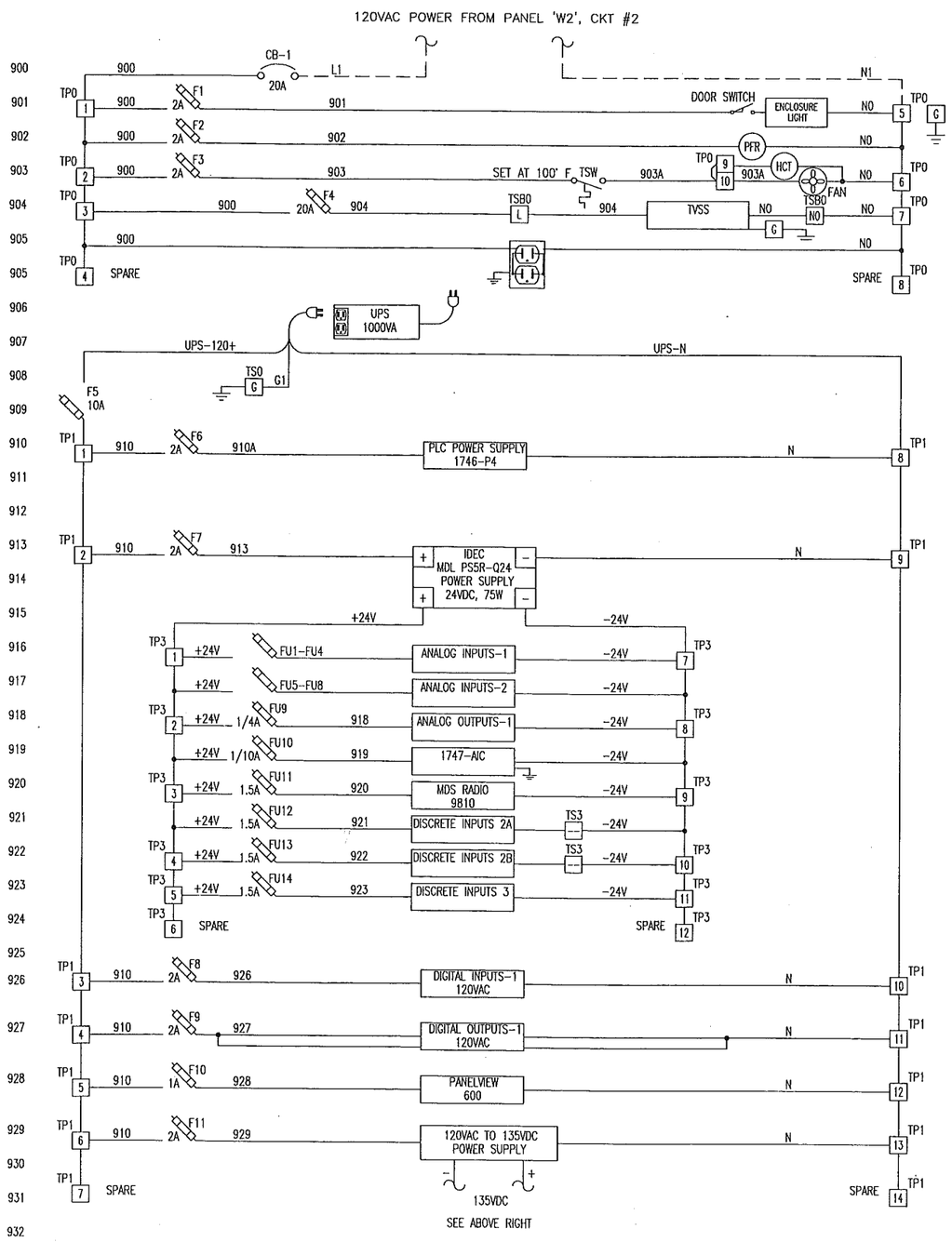

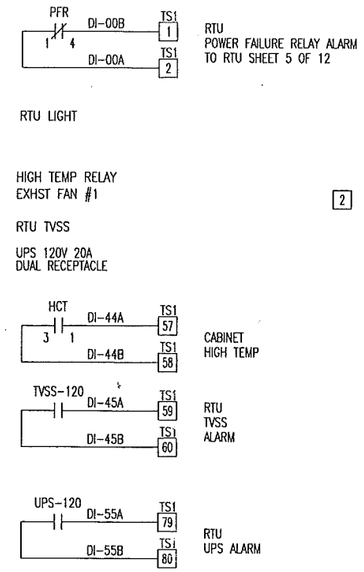

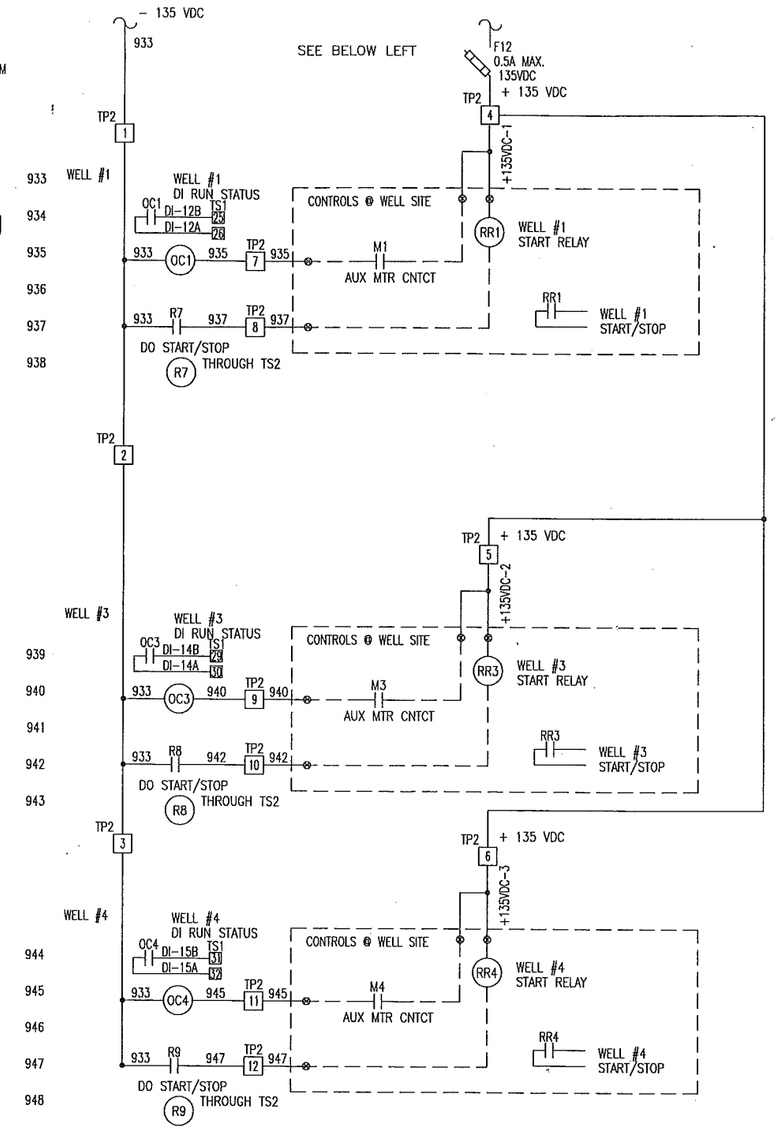

FUSE SCHEDULE	
F1, F2, F3	- MDL-2A
F4	- FNQ-R-20A
F5	- FNQ-R-10A
F6, F7, F8, F9, F11	- MDL-2A
F10	- MDL-1A
F12	- LP-CC-1/2A (135VDC);
FU1 - FU8	- GSB 32 mA
FU9	- AGC-1/4A
FU10	- AGC-1/10A
FU11 - FU14	- AGC-1.5A

TITLE: MASTER RTU POWER SCHEMATIC
CONTROL DIAGRAM - 120VAC, 24VDC, 135VDC
PERMANENT RTU AND FUSE SCHEDULE

REV.	BY:	DATE:
A	JBC	9/20/05
B	JBC	11/21/05
C	JBC	1/25/06
D	ASBUILTS	05/30/06
E	---	---

DWG BY: J.B.C. DATE: 12/20/04
APPD BY: TONY FISCHER JOB No: 04-615-2
SCALE: NONE UL508 APPROVAL MFR# E164765
FILE NAME: BLUES\05675\ASBLTS\RTUPWR\4
SHEET 4 OF 12

E39

Alliance Service & Control Specialists
4846 S. 40Th. St. Phoenix, Az 85040
(602) 431-8434

PROJECT
CUTTER BOOSTERS - WELL #2
ELECTRICAL UPGRADES
GLOBE ARIZONA

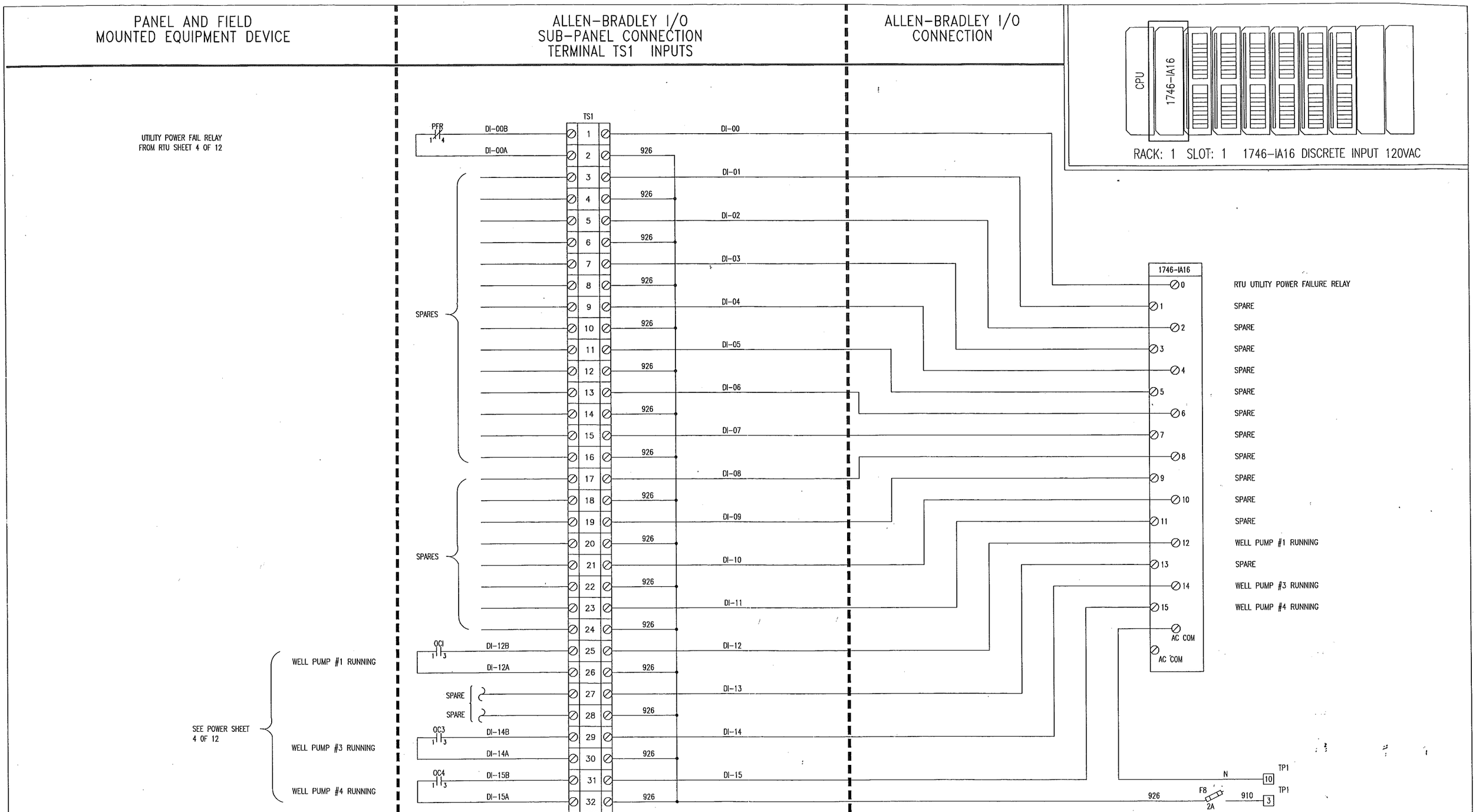
PANEL AND FIELD MOUNTED EQUIPMENT DEVICE
ALLEN-BRADLEY I/O SUB-PANEL CONNECTION TERMINAL TS1 INPUTS
ALLEN-BRADLEY I/O CONNECTION
CPU
1746-IA16
RACK: 1 SLOT: 1 1746-IA16 DISCRETE INPUT 120VAC
UTILITY POWER FAIL RELAY FROM RTU SHEET 4 OF 12
PFR
DI-00B
DI-00A
TS1
SPARES
SPARES
OC1
DI-12B
DI-12A
SPARE
SPARE
OC3
DI-14B
DI-14A
OC4
DI-15B
DI-15A
926
DI-00
DI-01
DI-02
DI-03
DI-04
DI-05
DI-06
DI-07
DI-08
DI-09
DI-10
DI-11
DI-12
DI-13
DI-14
DI-15
1746-IA16
RTU UTILITY POWER FAILURE RELAY
SPARE
SPARE
SPARE
SPARE
SPARE
SPARE
SPARE
SPARE
SPARE
SPARE
WELL PUMP #1 RUNNING
SPARE
WELL PUMP #3 RUNNING
WELL PUMP #4 RUNNING
AC COM
AC COM
WELL PUMP #1 RUNNING
SEE POWER SHEET 4 OF 12
WELL PUMP #3 RUNNING
WELL PUMP #4 RUNNING
N
TP1
10
F8
2A
910
3
TITLE: MASTER RTU SCHEMATIC CONTROLS DISCRETE INPUTS - 1 - 120VAC PERMANENT RTU DI - 1
REV. BY: DATE:
A JBC 11/21/05
B JBC 1/25/06
C ASBUILTS 05/30/06
D ---- ----
DWG BY: J.B.C.
DATE: 12/20/04
APPD BY: TONY FISCHER
JOB No: 04-615-2
SCALE: NONE
UL508 APPROVAL MFR# E164765
FILE NAME: BLUES\05675\ASBLTS\RTU\DII
SHEET 5 OF 12
E40
Alliance Service & Control Specialists
4846 S. 40Th. St. Phoenix, Az 85040
(602) 431-8434
PROJECT
CUTTER BOOSTERS - WELL #2
ELECTRICAL UPGRADES
GLOBE ARIZONA

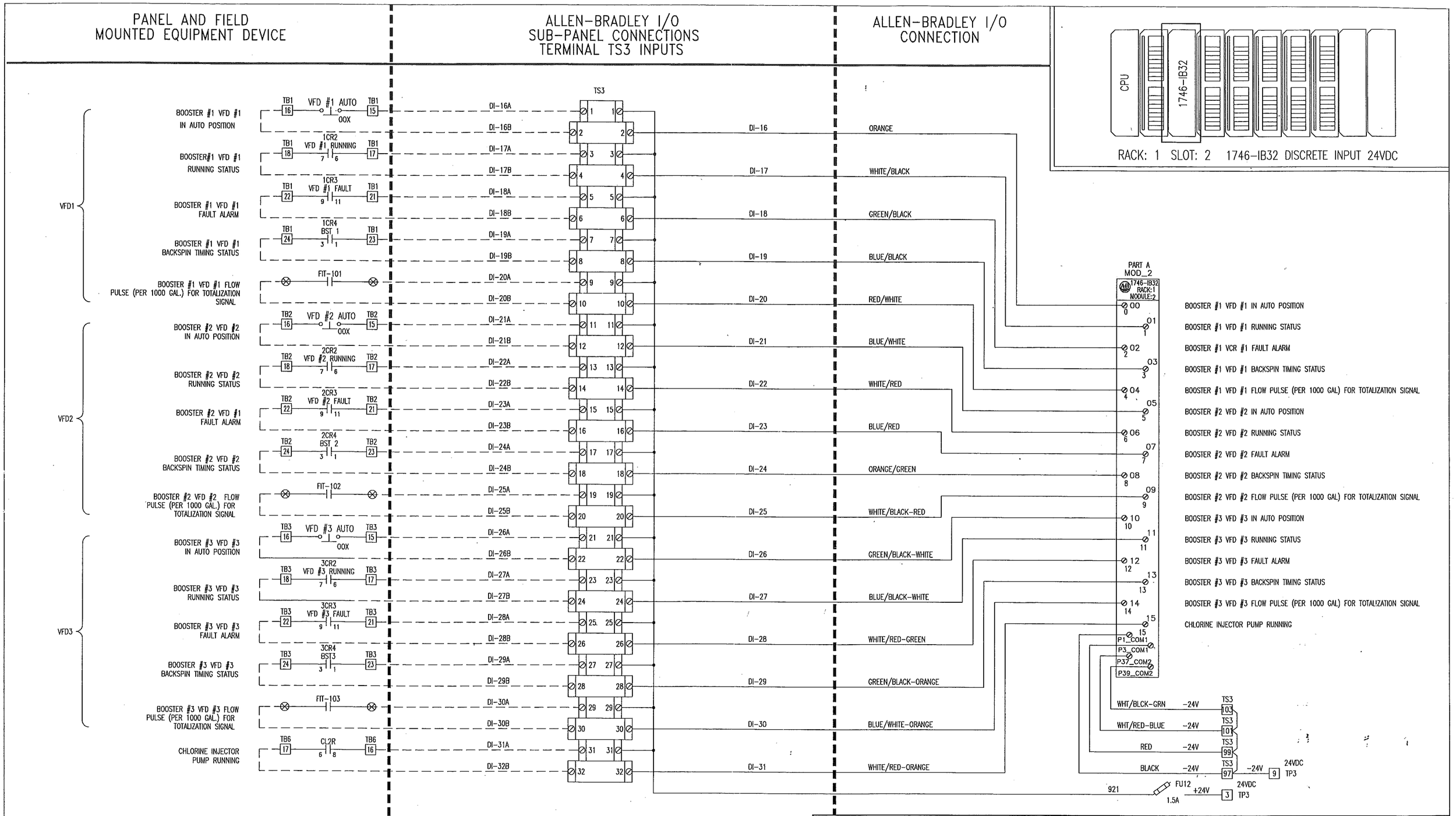
PANEL AND FIELD MOUNTED EQUIPMENT DEVICE
ALLEN-BRADLEY I/O SUB-PANEL CONNECTIONS TERMINAL TS3 INPUTS
ALLEN-BRADLEY I/O CONNECTION
CPU
1746-IB32
RACK: 1 SLOT: 2 1746-IB32 DISCRETE INPUT 24VDC
VFD1
BOOSTER #1 VFD #1 IN AUTO POSITION
BOOSTER#1 VFD #1 RUNNING STATUS
BOOSTER #1 VFD #1 FAULT ALARM
BOOSTER #1 VFD #1 BACKSPIN TIMING STATUS
BOOSTER #1 VFD #1 FLOW PULSE (PER 1000 GAL.) FOR TOTALIZATION SIGNAL
VFD2
BOOSTER #2 VFD #2 IN AUTO POSITION
BOOSTER #2 VFD #2 RUNNING STATUS
BOOSTER #2 VFD #1 FAULT ALARM
BOOSTER #2 VFD #2 BACKSPIN TIMING STATUS
BOOSTER #2 VFD #2 FLOW PULSE (PER 1000 GAL.) FOR TOTALIZATION SIGNAL
VFD3
BOOSTER #3 VFD #3 IN AUTO POSITION
BOOSTER #3 VFD #3 RUNNING STATUS
BOOSTER #3 VFD #3 FAULT ALARM
BOOSTER #3 VFD #3 BACKSPIN TIMING STATUS
BOOSTER #3 VFD #3 FLOW PULSE (PER 1000 GAL.) FOR TOTALIZATION SIGNAL
CHLORINE INJECTOR PUMP RUNNING
TS3
ORANGE
WHITE/BLACK
GREEN/BLACK
BLUE/BLACK
RED/WHITE
BLUE/WHITE
WHITE/RED
BLUE/RED
ORANGE/GREEN
WHITE/BLACK-RED
GREEN/BLACK-WHITE
BLUE/BLACK-WHITE
WHITE/RED-GREEN
GREEN/BLACK-ORANGE
BLUE/WHITE-ORANGE
WHITE/RED-ORANGE
PART A MOD_2
1746-IB32 RACK:1 MODULE:2
BOOSTER #1 VFD #1 IN AUTO POSITION
BOOSTER #1 VFD #1 RUNNING STATUS
BOOSTER #1 VCR #1 FAULT ALARM
BOOSTER #1 VFD #1 BACKSPIN TIMING STATUS
BOOSTER #1 VFD #1 FLOW PULSE (PER 1000 GAL) FOR TOTALIZATION SIGNAL
BOOSTER #2 VFD #2 IN AUTO POSITION
BOOSTER #2 VFD #2 RUNNING STATUS
BOOSTER #2 VFD #2 FAULT ALARM
BOOSTER #2 VFD #2 BACKSPIN TIMING STATUS
BOOSTER #2 VFD #2 FLOW PULSE (PER 1000 GAL) FOR TOTALIZATION SIGNAL
BOOSTER #3 VFD #3 IN AUTO POSITION
BOOSTER #3 VFD #3 RUNNING STATUS
BOOSTER #3 VFD #3 FAULT ALARM
BOOSTER #3 VFD #3 BACKSPIN TIMING STATUS
BOOSTER #3 VFD #3 FLOW PULSE (PER 1000 GAL) FOR TOTALIZATION SIGNAL
CHLORINE INJECTOR PUMP RUNNING
P1_COM1
P3_COM1
P37_COM2
P39_COM2
WHT/BLCK-GRN -24V
WHT/RED-BLUE -24V
RED -24V
BLACK -24V
24VDC TP3
921 FU12 1.5A +24V
E41
TITLE: MASTER RTU SCHEMATICS
DISCRETE INPUTS 2A CONTROL 24VDC
PERMANENT DI 2A 24VDC
REV. BY: DATE:
A JBC 11/21/05
B JBC 1/25/06
C ASBUILTS 05/30/06
D --- ---
DWG BY: J.B.C.
DATE: 12/20/04
APPD BY: TONY FISCHER
JOB No: 04-615-2
SCALE: NONE
UL508 APPROVAL MFR# E164765
FILE NAME: BLUES\050675\ASBLTS\RTU\DI2A
SHEET 6 OF 12
Alliance Service & Control Specialists
4846 S. 40Th. St. Phoenix, Az 85040
(602) 431-8434
PROJECT
CUTTER BOOSTERS - WELL #2
ELECTRICAL UPGRADES
GLOBE ARIZONA

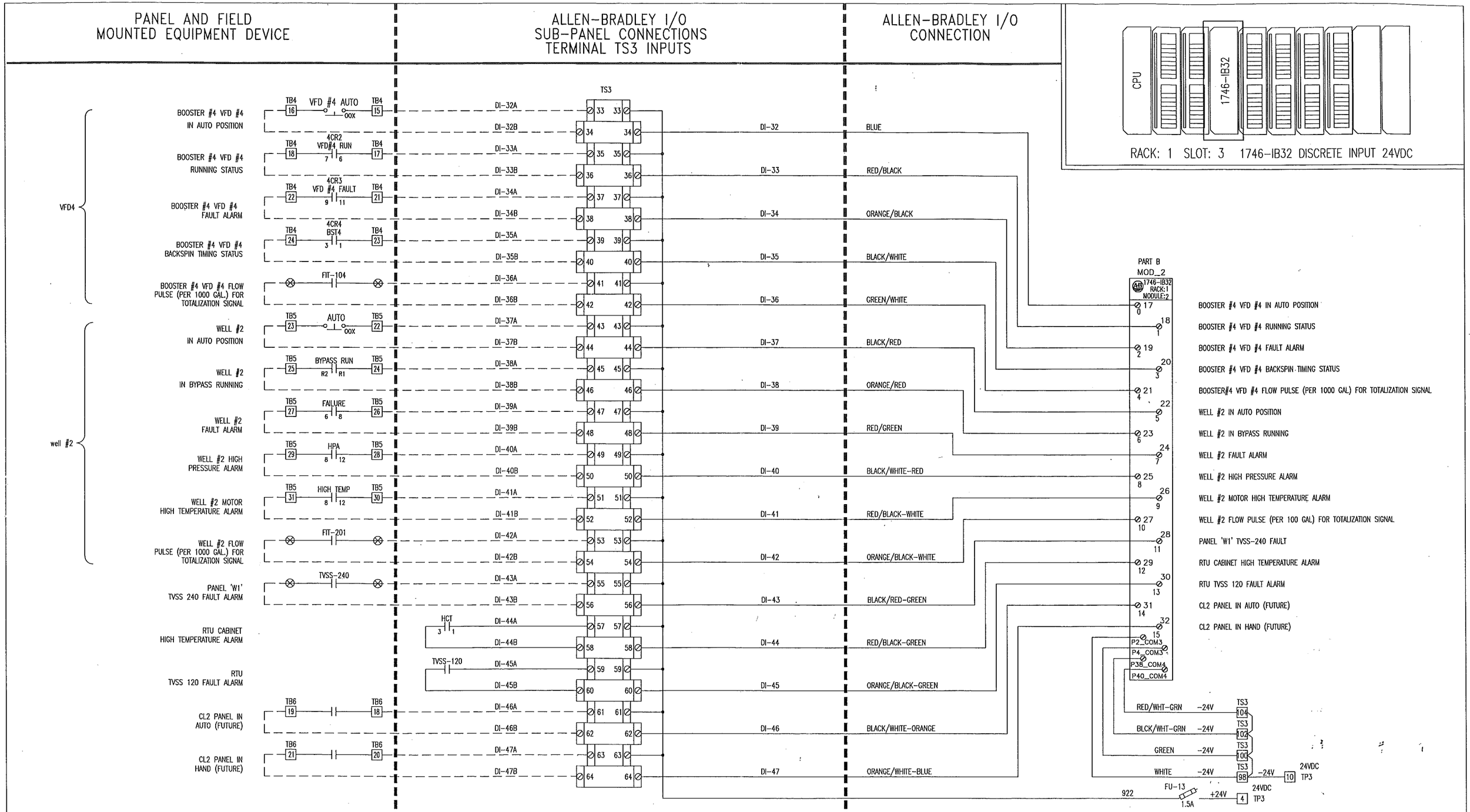

TITLE: MASTER RTU SCHEMATICS
DISCRETE INPUTS 2B CONTROL 24VDC
PERMANENT DI 2B 24VDC

REV.	BY:	DATE:
A	JBC	9/20/05
B	JBC	11/21/05
C	JBC	1/25/06
D	ASBUILTS	05/30/06
E	----	----

DWG BY: J.B.C. DATE: 12/20/04
APPD BY: TONY FISCHER JOB No: 04-615-2
SCALE: NONE UL508 APPROVAL MFR# E164765
FILE NAME: BLUES\05675\ASBLTS\RTU\DI2B
SHEET 7 OF 12

E42

Alliance Service & Control Specialists
4846 S. 40Th. St. Phoenix, Az 85040
(602) 431-8434

PROJECT
CUTTER BOOSTERS - WELL #2
ELECTRICAL UPGRADES
GLOBE ARIZONA

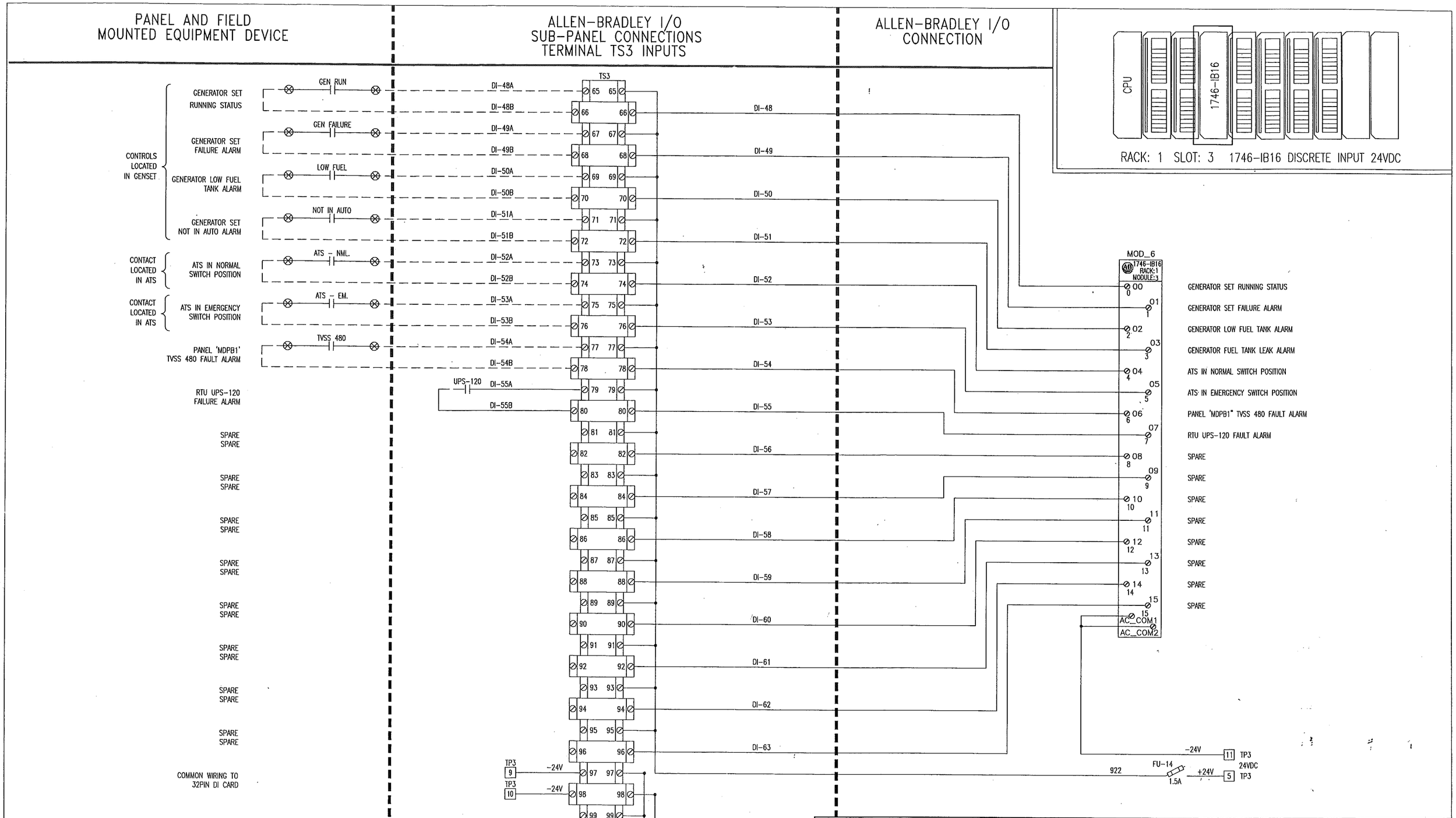

TITLE: MASTER RTU SCHEMATICS
DISCRETE INPUTS 3 CONTROL 24VDC
PERMANENT DI 3 24VDC

REV.	BY:	DATE:
A	JBC	9/20/05
B	JBC	11/21/05
C	JBC	1/25/06
D	ASBUILTS	05/30/06
E	---	---

DWG BY: J.B.C. DATE: 12/20/04
APPD BY: TONY FISCHER JOB No: 04-615-2
SCALE: NONE UL508 APPROVAL MFR: E164765
FILE NAME: BLUES\05675\ASBLTS\RTU\DI3
SHEET 8 OF 12

E43

Alliance Service & Control Specialists
4846 S. 40Th. St. Phoenix, Az 85040
(602) 431-8434

PROJECT
CUTTER BOOSTERS - WELL #2
ELECTRICAL UPGRADES
GLOBE ARIZONA

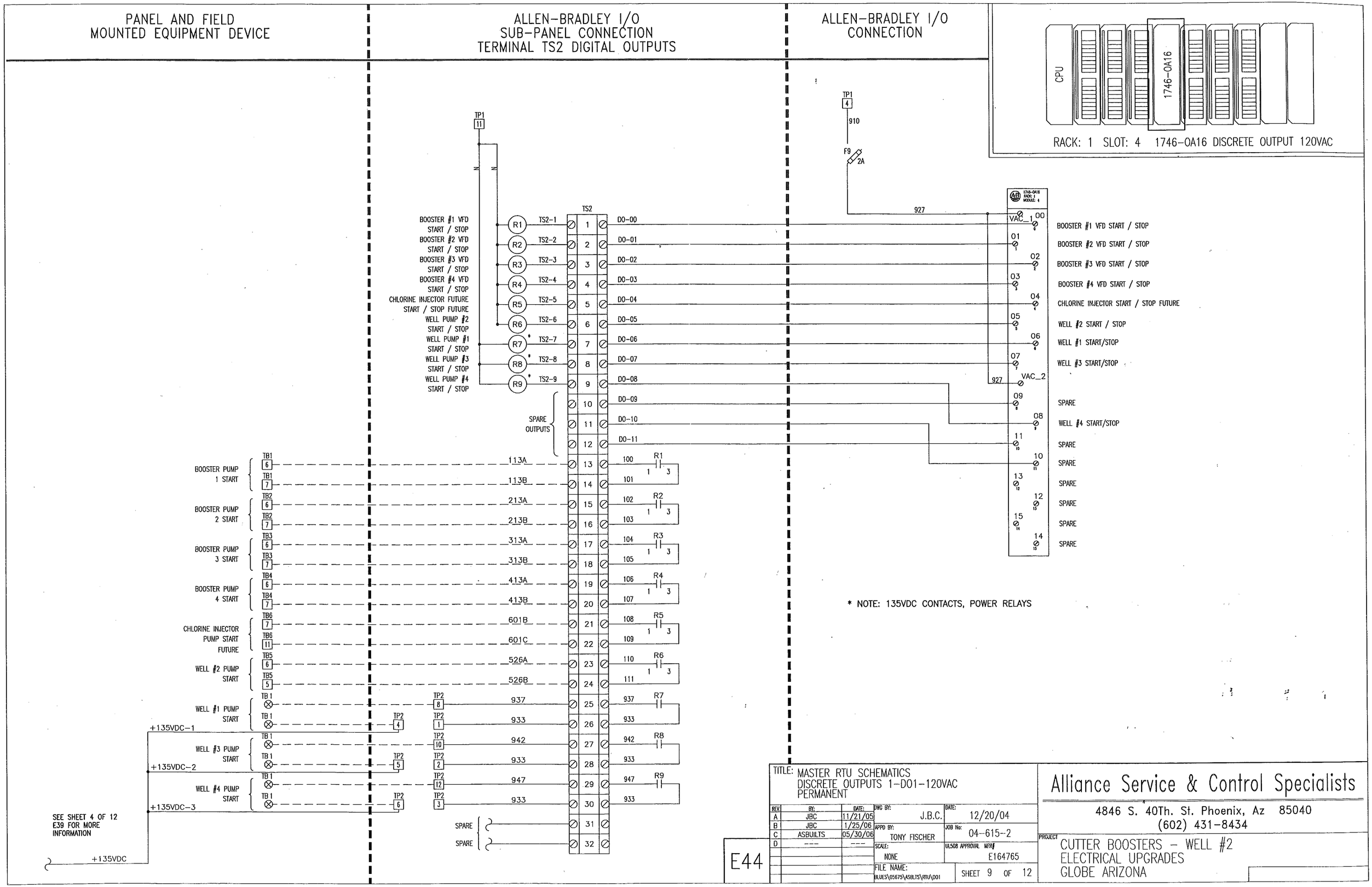
PANEL AND FIELD MOUNTED EQUIPMENT DEVICE
ALLEN-BRADLEY I/O SUB-PANEL CONNECTION TERMINAL TS2 DIGITAL OUTPUTS
ALLEN-BRADLEY I/O CONNECTION
CPU
1746-OA16
RACK: 1 SLOT: 4 1746-OA16 DISCRETE OUTPUT 120VAC
TP1 11
TP1 4
910
F9 2A
927
TS2
BOOSTER #1 VFD START / STOP
BOOSTER #2 VFD START / STOP
BOOSTER #3 VFD START / STOP
BOOSTER #4 VFD START / STOP
CHLORINE INJECTOR FUTURE START / STOP FUTURE
WELL PUMP #2 START / STOP
WELL PUMP #1 START / STOP
WELL PUMP #3 START / STOP
WELL PUMP #4 START / STOP
R1 R2 R3 R4 R5 R6 R7* R8* R9*
TS2-1 TS2-2 TS2-3 TS2-4 TS2-5 TS2-6 TS2-7 TS2-8 TS2-9
DO-00 DO-01 DO-02 DO-03 DO-04 DO-05 DO-06 DO-07 DO-08 DO-09 DO-10 DO-11
SPARE OUTPUTS
BOOSTER PUMP 1 START
BOOSTER PUMP 2 START
BOOSTER PUMP 3 START
BOOSTER PUMP 4 START
CHLORINE INJECTOR PUMP START FUTURE
WELL #2 PUMP START
WELL #1 PUMP START
WELL #3 PUMP START
WELL #4 PUMP START
TB1 6 TB1 7 TB2 6 TB2 7 TB3 6 TB3 7 TB4 6 TB4 7 TB6 7 TB6 11 TB5 6 TB5 5
113A 113B 213A 213B 313A 313B 413A 413B 601B 601C 526A 526B
100 101 102 103 104 105 106 107 108 109 110 111
R1 R2 R3 R4 R5 R6
TB 1 TP2 8 TP2 1 TP2 10 TP2 2 TP2 12 TP2 3
937 933 942 933 947 933
R7 R8 R9
TP2 4 TP2 5 TP2 6
+135VDC-1
+135VDC-2
+135VDC-3
+135VDC
SEE SHEET 4 OF 12 E39 FOR MORE INFORMATION
SPARE
SPARE
1746-OA16 RACK: 1 MODULE: 4
VAC_1 00 01 02 03 04 05 06 07 VAC_2 09 08 11 10 13 12 15 14
BOOSTER #1 VFD START / STOP
BOOSTER #2 VFD START / STOP
BOOSTER #3 VFD START / STOP
BOOSTER #4 VFD START / STOP
CHLORINE INJECTOR START / STOP FUTURE
WELL #2 START / STOP
WELL #1 START/STOP
WELL #3 START/STOP
SPARE
WELL #4 START/STOP
SPARE
SPARE
SPARE
SPARE
SPARE
SPARE
* NOTE: 135VDC CONTACTS, POWER RELAYS
TITLE: MASTER RTU SCHEMATICS DISCRETE OUTPUTS 1-DO1-120VAC PERMANENT
REV. BY: DATE:
A JBC 11/21/05
B JBC 1/25/06
C ASBUILTS 05/30/06
D --- ---
DWG BY: J.B.C. DATE: 12/20/04
APPD BY: TONY FISCHER JOB No: 04-615-2
SCALE: NONE UL508 APPROVAL MFR# E164765
FILE NAME: BLUES\05675\ASBLTS\RTU\DO1
SHEET 9 OF 12
E44
Alliance Service & Control Specialists
4846 S. 40Th. St. Phoenix, Az 85040
(602) 431-8434
PROJECT
CUTTER BOOSTERS - WELL #2
ELECTRICAL UPGRADES
GLOBE ARIZONA

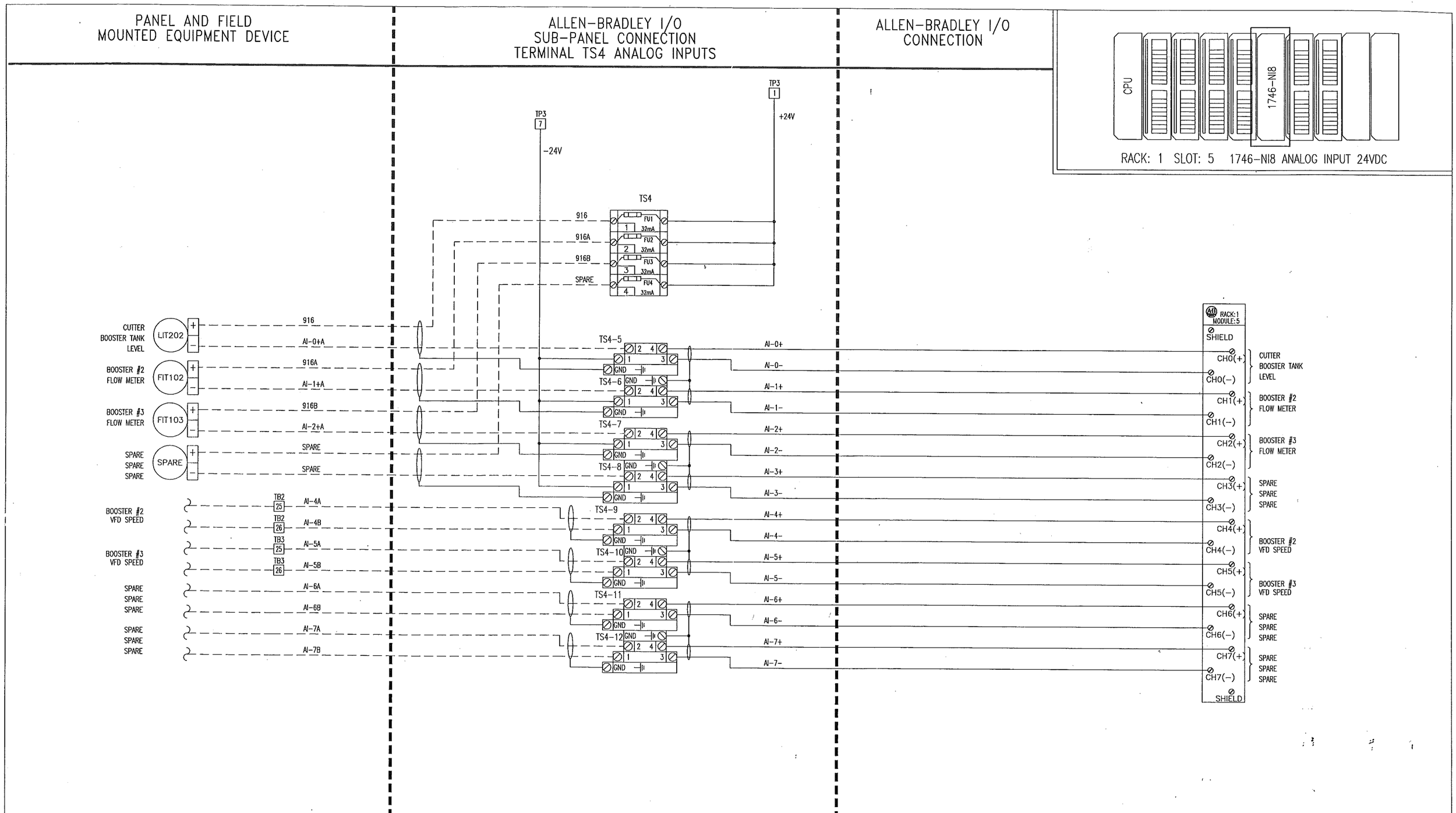

TITLE: MASTER RTU ANALOG INPUTS-1 PERMANENT

REV.	BY:	DATE:
A	JBC	11/21/05
B	JBC	1/25/06
C	ASBUILTS	05/30/06
D	---	---

DWG BY: JBC
DATE: 12/20/04
APPD BY: TONY FISCHER
JOB No: 04-615-2
SCALE: NONE
UL508 APPROVAL MFR# E164765
FILE NAME: BLUES\05675\ASBLTS\RTU\AI1
SHEET 10 OF 12

E45

Alliance Service & Control Specialists
4846 S. 40Th. St. Phoenix, Az 85040
(602) 431-8434

PROJECT
CUTTER BOOSTERS - WELL #2
ELECTRICAL UPGRADES
GLOBE ARIZONA

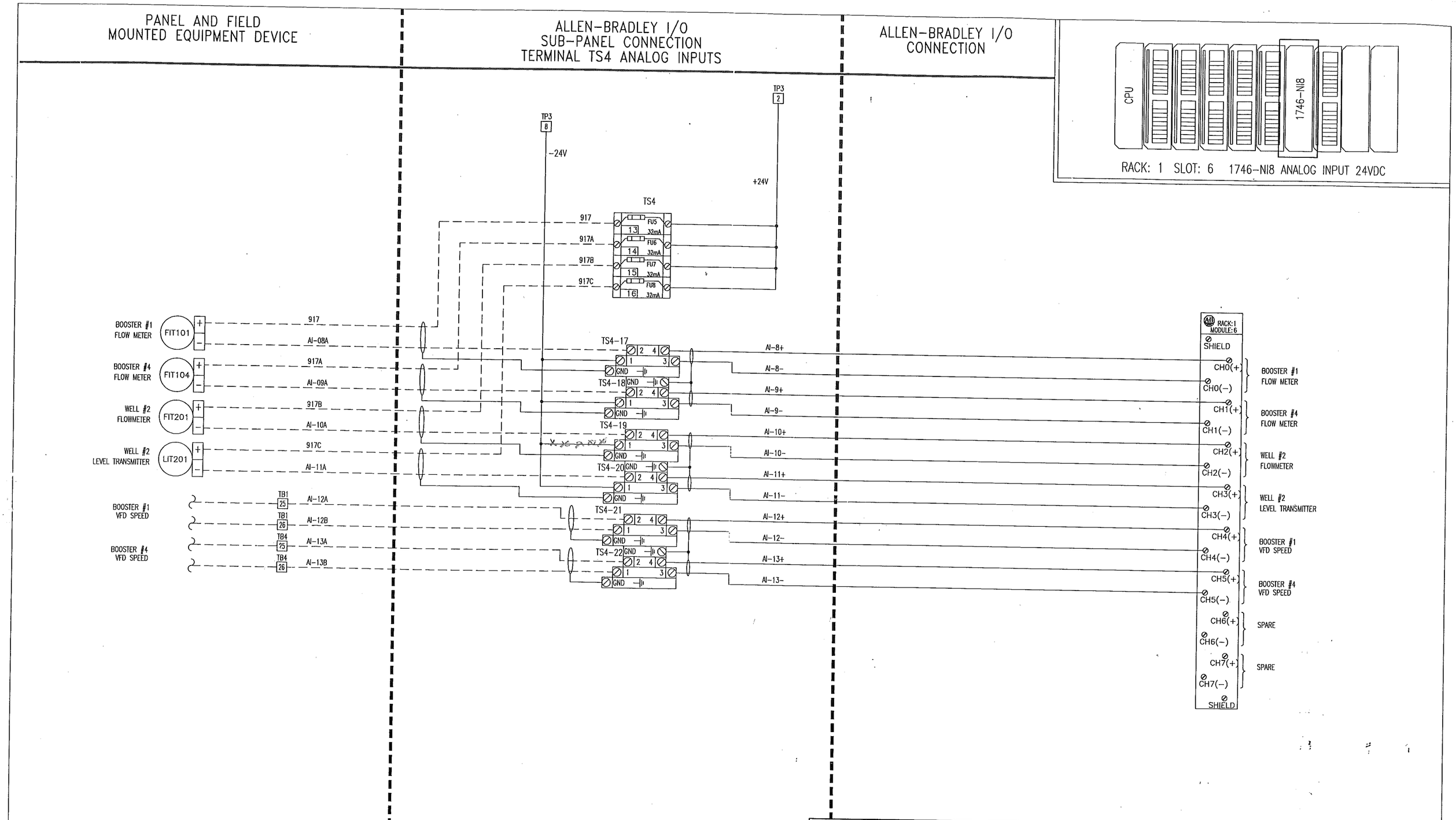

TITLE: MASTER RTU ANALOG INPUTS-2 PERMANENT

REV.	BY:	DATE:
A	JBC	11/21/05
B	JBC	1/25/06
C	ASBUILTS	05/30/06
D	---	---

DWG BY: JBC
DATE: 12/20/04
APPD BY: TONY FISCHER
JOB No: 04-615-2
SCALE: NONE
UL508 APPROVAL NFRI E164765
FILE NAME: BLUES\05675\ASBLTS\RTU\AI2
SHEET 11 OF 12

E46

Alliance Service & Control Specialists
4846 S. 40Th. St. Phoenix, Az 85040
(602) 431-8434

PROJECT
CUTTER BOOSTERS - WELL #2
ELECTRICAL UPGRADES
GLOBE ARIZONA

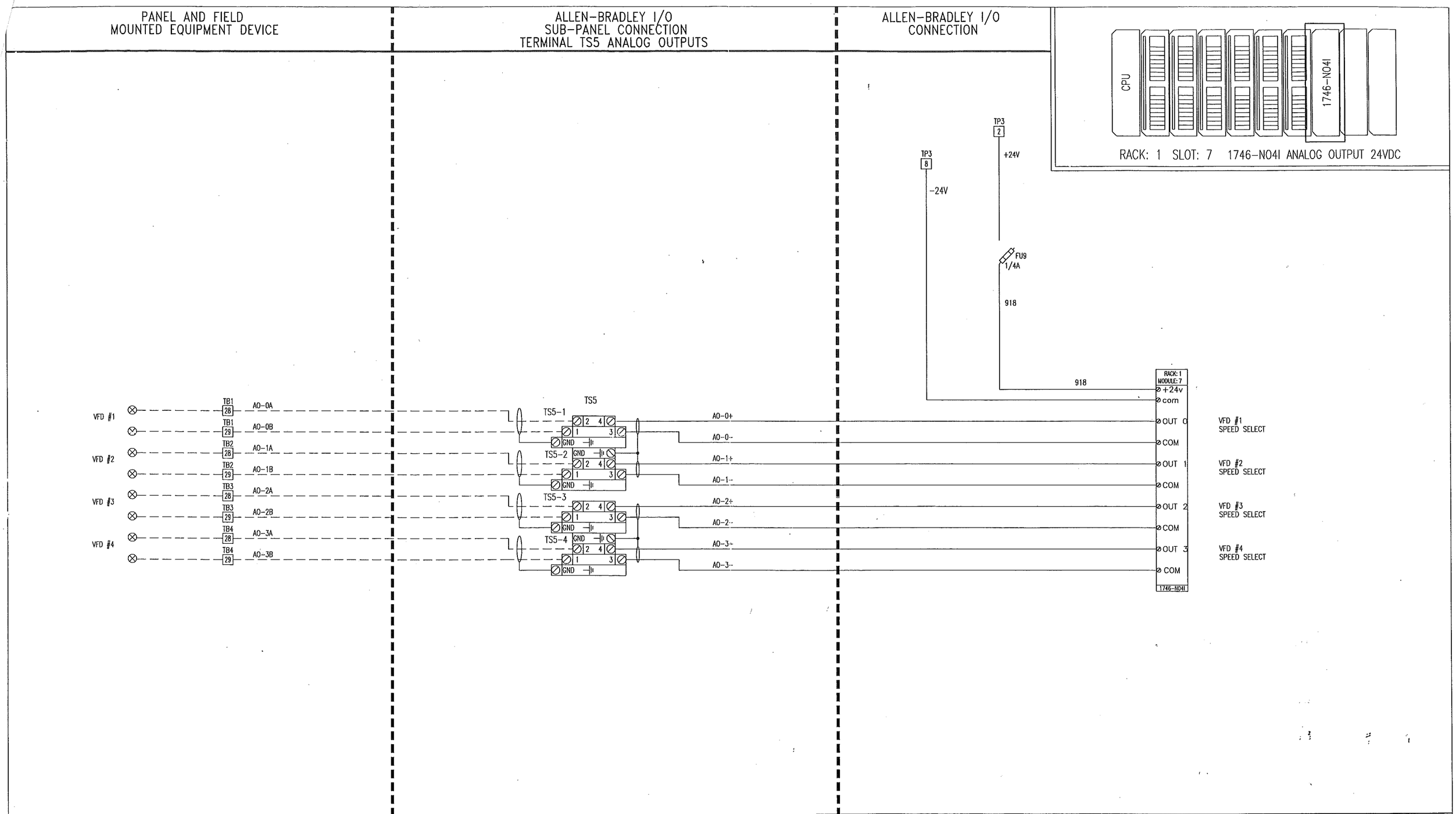

TITLE: MASTER RTU
ANALOG OUTPUTS-1
PERMANENT

REV.	BY:	DATE:
A	JBC	11/21/05
B	JBC	1/25/06
C	ASBUILTS	05/30/06
D	---	---

DWG BY: JBC
DATE: 12/20/04
APPD BY: TONY FISCHER
JOB No: 04-615-2
SCALE: NONE
UL508 APPROVAL MFR# E164765
FILE NAME: BLUES\05675\ASBLTS\RTU\A01
SHEET 12 OF 12

E47

Alliance Service & Control Specialists
4846 S. 40Th. St. Phoenix, Az 85040
(602) 431-8434

PROJECT
CUTTER BOOSTERS - WELL #2
ELECTRICAL UPGRADES
GLOBE ARIZONA

FRONT PANEL ELEVATION

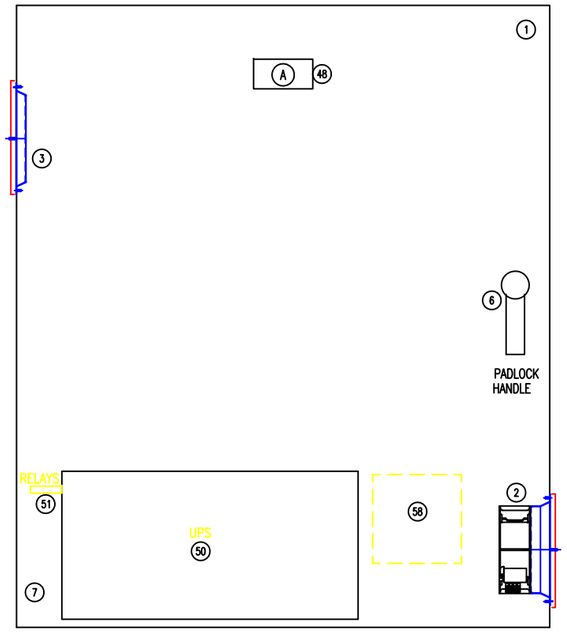

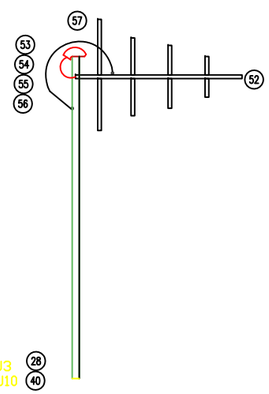

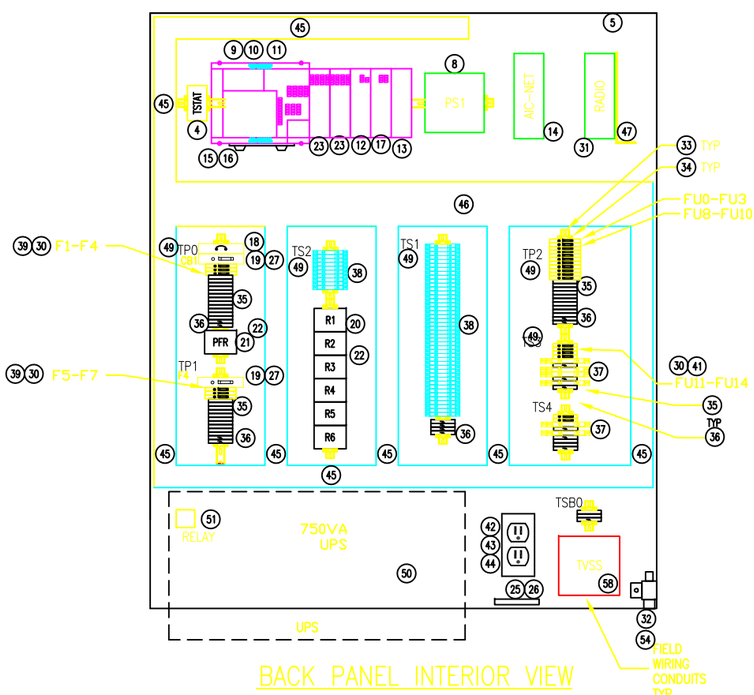

BACK PANEL INTERIOR VIEW

BILL OF MATERIALS

ITEM	QTY	MANUFACTURER	PART NUMBER	DESCRIPTION
1	1	HOFFMAN	CSD483612	WALL MOUNT CONCEPT ENCLOSURES
2	1	HOFFMAN	TFP61	6" COMPOSITE FAN AND GRILLE
3	1	HOFFMAN	TEP6	EXHAUST GRILLE
4	1	HOFFMAN	ATEMNO	CABINET THERMOSTAT
5	1	HOFFMAN	CP4836	BACK PANEL
6	1	HOFFMAN	CWHPTO	PADLOCK HANDLE
7	1	HOFFMAN	ADPI	SMALL DATA POCKET
8	1	IDEC	PS5R-D24	24VDC, 50W, POWER SUPPLY
9	1	ALLEN-BRADLEY	1764-24BWA	MICROLOGIX 1500 BASE UNIT 120V CONTROLLER
10	1	ALLEN-BRADLEY	1764-LRP	1500 MICROLOGIX PROCESSOR
11	1	ALLEN-BRADLEY	1761-MM1	MEMORY MODULE
12	1	ALLEN-BRADLEY	1769-IF4	4 CHANNEL ANALOG INPUT MODULE
13	1	ALLEN-BRADLEY	1769-ECR	RIGHT END TERMINAL CAP
14	1	ALLEN-BRADLEY	1761-NET-AIC	DH485 PORT MODULE
15	1	ALLEN-BRADLEY	1761-CBL-AM00	COMMUNICATION CABLE
16	1	ALLEN-BRADLEY	1761-CABL-PM02	COMMUNICATION CABLE
17	1	ALLEN-BRADLEY	1769-OF2CI	6 CHANNEL ANALOG OUTPUT MODULE
18	1	ALLEN-BRADLEY	1492-SPU1C200	20A 1 POLE CIRCUT BREAKER
19	1	ALLEN-BRADLEY	1492-FB1C30-L	1-POLE FUSE BLOCK
20	6	ALLEN-BRADLEY	700-HA32724	24V DC 2 POLE RELAY
21	1	ALLEN-BRADLEY	700-HA32A1	2 POLE RELAY 120VAC COIL, 120VAC CONTACTS
22	7	ALLEN-BRADLEY	700-HN125	8-PIN RELAY SOCKET
23	2	ALLEN-BRADLEY	1769-IQ16	16 CHANNEL 24VDC DISCRETE INPUT MODULE
24	-	---	---	----
25	1	BURNDY	K2A25U	MECHANICAL GROUND LUG
26	1	SQUARE D	PK7GTA	MECHANICAL GROUND BAR
27	1	BUSSMANN	FNQ-R-10A	CLASS CC TIME DELAY FUSE
28	7	BUSSMANN	AGC-XXA	1/4"X1 1/4"-24VDC FAST ACTING GLASS FUSE
29	6	BUSSMANN	MDL-XXA	1/4"-1 1/4"-TIME DELAY 12VAC GLASS FUSE
30	4	FERRAZ-SHAWMUT	GSB-1/32A	5MMX20MM 32MA FAST ACTING GLASS FUSE
31	1	MDS	9810	SPREAD SPECTRUM RADIO
32	1	POLYPHASER	IS-B50LN-C2	ANTENNA SURGE PROTECTOR
33	11'	PHOENIX CONTACT	NS 35/7,5	DIN RAIL
34	19	PHOENIX CONTACT	E/NS 35 N	TERMINAL END BRACKETS
35	38	PHOENIX CONTACT	UK 5N	FEED THROUGH TERMINAL BLOCKS
36	17	PHOENIX CONTACT	UGLKL5	GROUND TERMINAL BLOCK
37	6	PHOENIX CONTACT	TT-2PE-24VDC	SURGE TERMINAL BLOCK
38	54	PHOENIX CONTACT	UKK5	DOUBLE STACK TERMINAL BLOCKS
39	6	PHOENIX CONTACT	UK 6,3 HESILA250	250VAC FUSED TERMINAL BLOCK W/INDICATOR
40	11	PHOENIX CONTACT	UK 6,3 HESILED24	24VDC FUSED TERMINAL BLOCK W/INDICATOR
41	6	PHOENIX CONTACT	UT 4 HESILED24	UNIVERSAL 24VDC FUSED TERMINAL BLOCK W/INDICATOR
42	1	LEVITON	5262A-I	120V 15A DUPLEX RECEPTACLE
43	1	STEEL CITY	58-C-7	COVER PLATE
44	1	STEEL CITY	58361-1/2	2"X4" UTILITY BOX
45	20'	PANDUIT	F1.5X4LG6, C2LG6	1.5"X4" LIGHT GRAY WIRE DUCT W/ 2" COVER
46	6'	PANDUIT	F3X4LG6, C3LG6	3"X4" LIGHT GRAY WIRE DUCT W/ 3" COVER
47	1	ASCS	METAL L-BRACKET	RADIO STAND
48	1	ASCS	LAMACOID	2"X4" NAMEPLATE WHITE WITH BLACK LETTERS
49	LOT	BROTHERS	NAME ID	1/2"X1" WHITE TAPE BLACK LETTER NAME ID'S
50	1	POWERWARE	PW 9120 1000	1000 VA SMART-UPS
51	1	POWERWARE	1014018	UPS RELAY I/O MODULE AS/400
52	1	SCALA	TY-900	YAGI DIRECTIONAL ANTENNA
53	---	ANDREW	LDF4-50A	HELIAX 1/2" COAXIAL CABLE (IF OVER 50' NEED BIGGER CABLE)
54	2	ANDREW	L4PNM-RC	1/2"-M-CONNECTORS
55	1	ANDREW	SGL4-0682	GROUND CONNECTOR KIT
56	1	ANDREW	246790	ANTENNA CABLE WEATHER KIT
57	1	THOMAS & BETTS	SH-106	2" ANTENNA POLE WEATHERHEAD
58	1	SYCOM	SYC-240-1-DC-SC	TVSS SURGE SUPPRESSOR
59	-	---	---	----
60				
61				
62				
63				
64				

E13

ALLIANCE SERVICE & CONTROL SPECIALISTS
PHOENIX, AZ
(602)431-8434

TITLE: APACHEPEAKS PUMPSTATION
RTU ELEVATIONS AND
BILL OF MATERIALS

REV.	BY:	DATE:
A	JRJ - AS-BUILT	4/07/09

DWG BY: JRJ
DATE: 10/11/07
APPD BY: ROD ROBERTSON
JOB No: 08-828
SCALE: NONE
UL508 APPROVAL MFR# E164765
FILE NAME: BLUES\APACHEPEAKS\E13
SHEET 13 OF 21

Alliance Service & Control Specialists
4846 S. 40Th. St. Phoenix, Az 85040
(602) 431-8434

PROJECT
CITY OF GLOBE
APACHEPEAKS
POWER UPGRADES

AS-BUILT

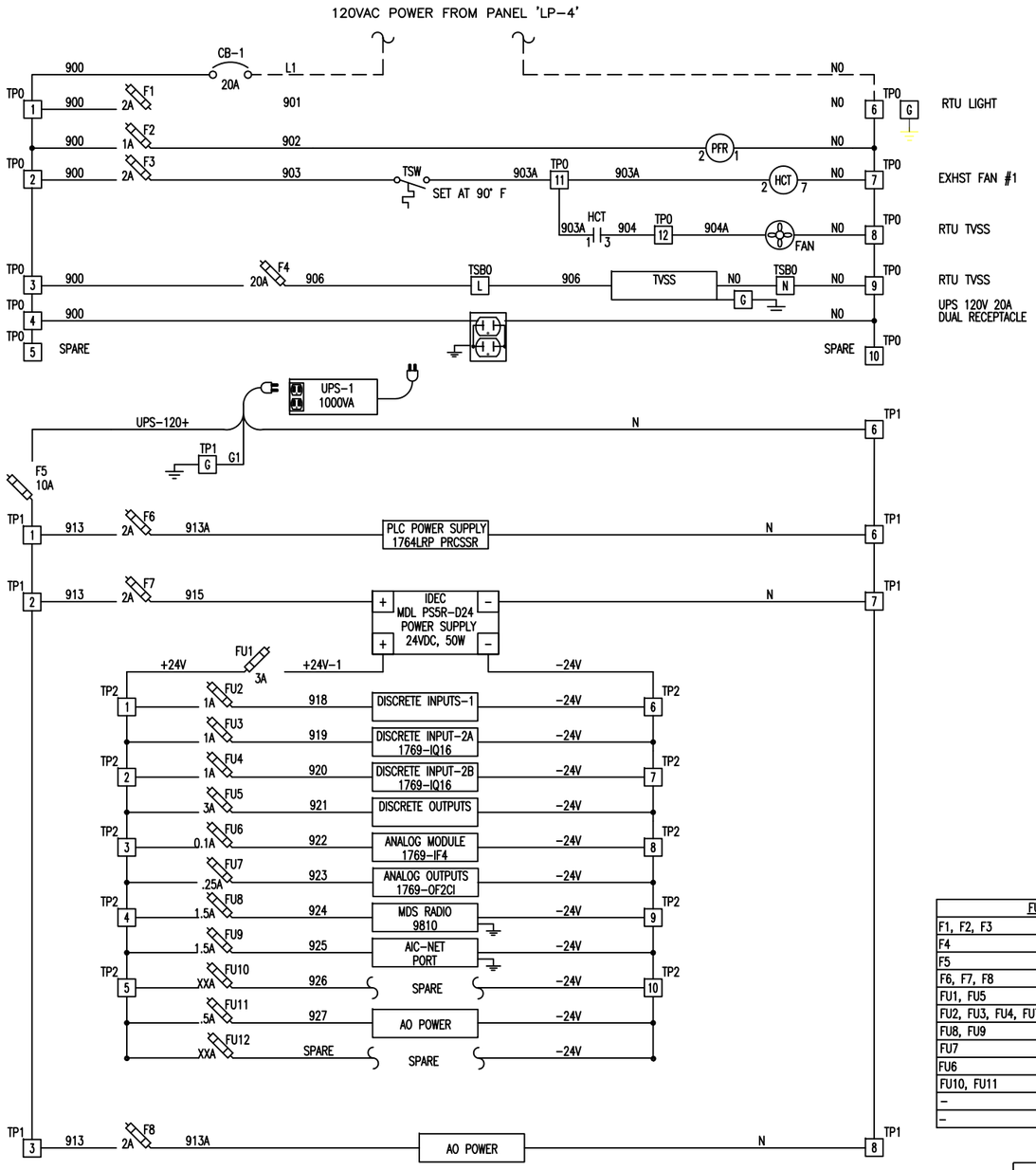

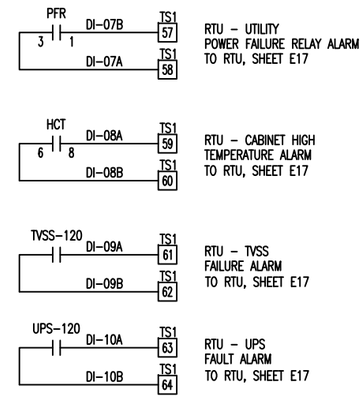

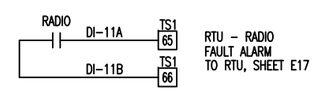

BILL OF MATERIALS			
ITEM	MANUFACTURER	PART No.	DESCRIPTION
A	ASCS	ID	APACHEPEAKS, RTU CABINET
B	-	-	-
C			
D			

⊗ - TERMINALS ON FIELD DEVICES

△ - REMOTE/FIELD DEVICES

□ - TERMINAL BLOCKS

* #14 600V MTW- MINIMUM FOR CONTROL WIRING
* #18 600V TSP- MINIMUM FOR ANALOG SIGNALS
* USE ONLY 60°C COPPER WIRE FOR CONTROL
**USE ONLY 75°C COPPER WIRE FOR POWER WIRING

TERMINAL LEGEND
TP0 - 120VAC GENERAL POWER
TP1 - 120VAC UPS POWER
TP2 - 24VDC I/O CONTROL POWER
TS1 - 24VDC DISCRETE INPUTS
TS2 - 24VDC DISCRETE OUTPUT
TS3 - 24VDC ANALOG INPUT

FUSE SCHEDULE	
F1, F2, F3	- MDL-2A +
F4	- FNQ-R-20A +
F5	- FNQ-R-10A +
F6, F7, F8	- MDL-2A +
FU1, FU5	- AGC-3A +
FU2, FU3, FU4, FU7	- AGC-1A +
FU8, FU9	- AGC-1.5A +
FU7	- ACG-1/4A +
FU6	- AGC-1/10A
FU10, FU11	- AGC-1/2A +
-	- SPARES
-	-

MASTER RTU CONTROL WIRING

RED	- 120V AC
WHITE	- AC NUETRAL
BLUE	- 24VDC POSITIVE
BROWN	- 24VDC NEGITIVE
GREEN	- GROUND

E14

TITLE: APACHEPEAKS PUMPSTATION
RTU CONTROL POWER DIAGRAM
AND FUSE SCHEDULE

REV.	BY:	DATE:
A	JRJ - AS-BUILT	4/07/09

DWG BY: JRJ
DATE: 10/12/07
APPD BY: ROD ROBERTSON
JOB No: 08-828
SCALE: NONE
UL508 APPROVAL MFR# E164765
FILE NAME: BLUES\APACHEPEAKS\E14
SHEET 14 OF 21

Alliance Service & Control Specialists
4846 S. 40Th. St. Phoenix, Az 85040
(602) 431-8434

PROJECT
CITY OF GLOBE
APACHEPEAKS
POWER UPGRADES

AS-BUILT

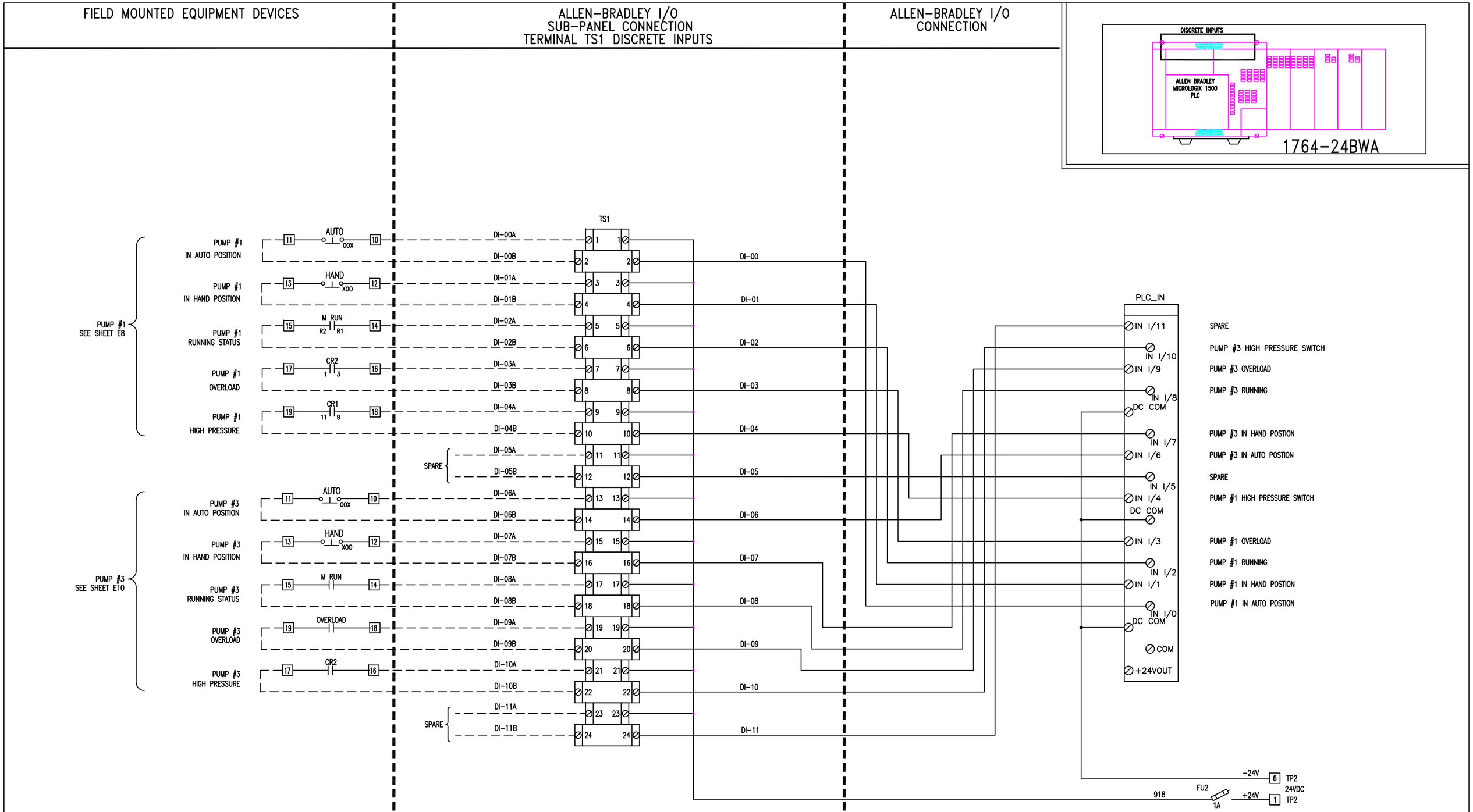

TITLE: APACHEPEAKS PUMPSTATION
RTU DISCRETE INPUT CONTROLS
DI 1 – 24VDC

REV.	BY:	DATE:
A	JRJ	10/17/07
B	JRJ – AS-BUILT	4/07/09

DWG BY: JRJ — DATE: 10/12/07
APPD BY: ROD ROBERTSON — JOB No: 08-828
SCALE: NONE — UL508 APPROVAL MFR# E164765
FILE NAME: BLUES\APACHEPEAKS\E15 — SHEET 15 OF 21

E15

Alliance Service & Control Specialists
4846 S. 40Th. St. Phoenix, Az 85040
(602) 431-8434

PROJECT
CITY OF GLOBE
APACHEPEAKS
POWER UPGRADES

AS-BUILT

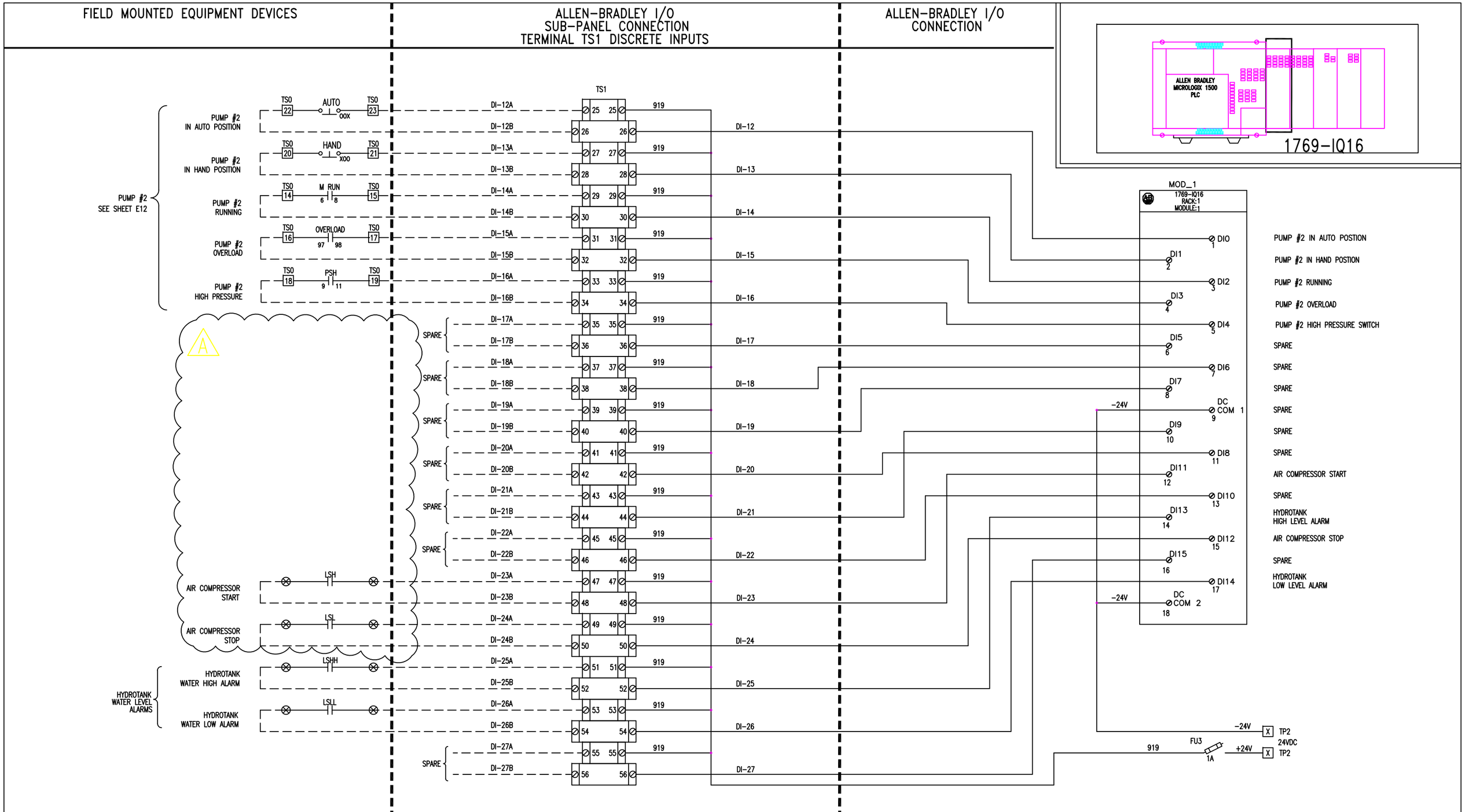

TITLE: APACHEPEAKS PUMPSTATION
RTU DISCRETE INPUT CONTROLS
DI 2 – 24VDC

REV.	BY:	DATE:
A	JRJ – REMOVE PERM. GEN.	02/18/08
B	JRJ – AS-BUILT	4/07/09

DWG BY: JRJ
DATE: 10/12/07
APPD BY: ROD ROBERTSON
JOB No: 08-828
SCALE: NONE
UL508 APPROVAL MFR# E164765
FILE NAME: BLUES\APACHEPEAKS\E16
SHEET 16 OF 21

Alliance Service & Control Specialists
4846 S. 40Th. St. Phoenix, Az 85040
(602) 431-8434

PROJECT
CITY OF GLOBE
APACHEPEAKS
POWER UPGRADES

AS-BUILT

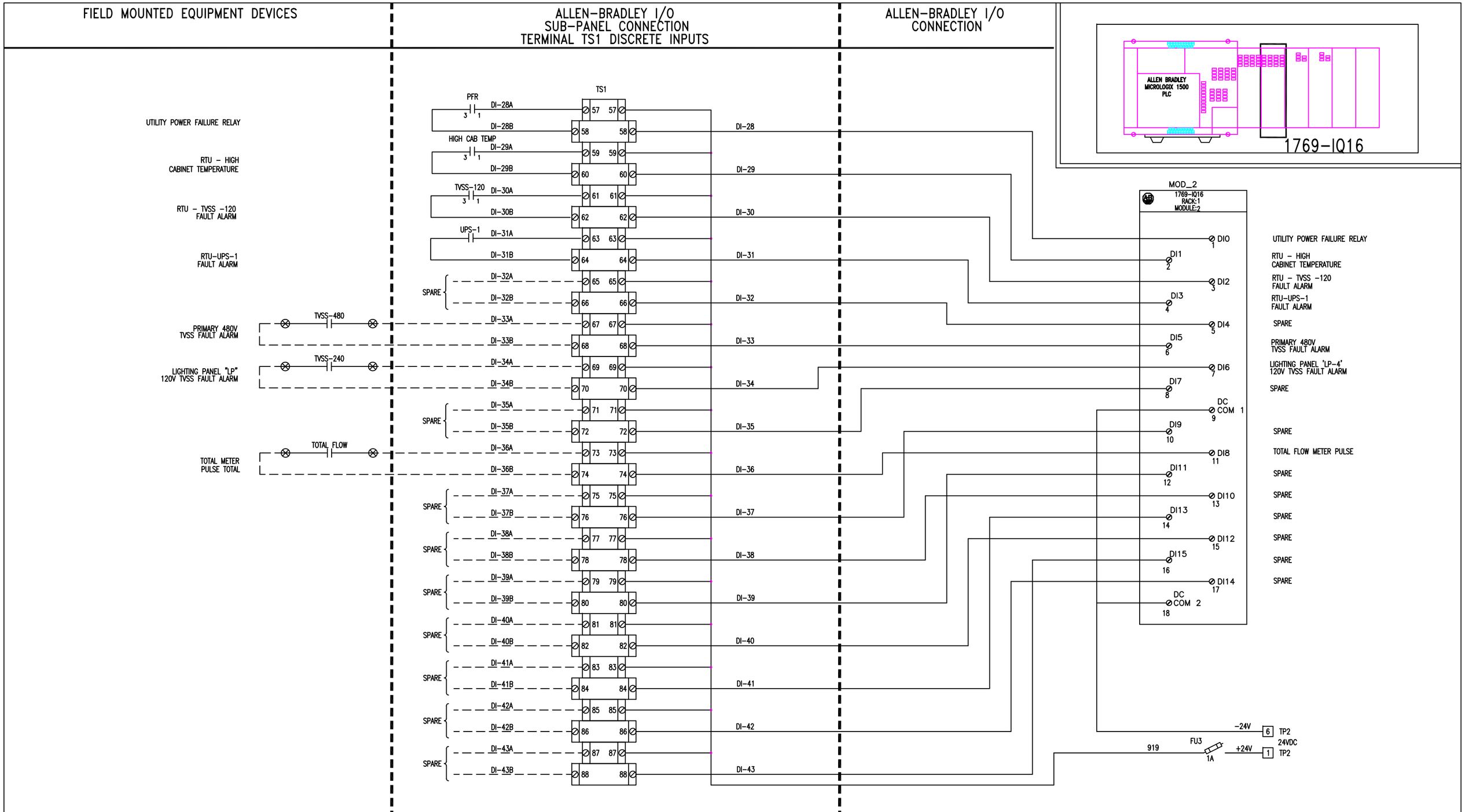

TITLE: APACHEPEAKS PUMPSTATION
RTU DISCRETE INPUT CONTROLS
DI 3 - 24VDC

REV.	BY:	DATE:
A	JRJ - AS-BUILT	4/07/09
B	---	---

DWG BY: JRJ
DATE: 10/25/07
APPD BY: ROD ROBERTSON
JOB No: 08-828
SCALE: NONE
UL508 APPROVAL MFR/ E164765
FILE NAME: BLUES\APACHEPEAK\E17
SHEET 17 OF 21

E17

Alliance Service & Control Specialists
4846 S. 40Th. St. Phoenix, Az 85040
(602) 431-8434

PROJECT
CITY OF GLOBE
APACHEPEAKS
POWER UPGRADES

AS-BUILT

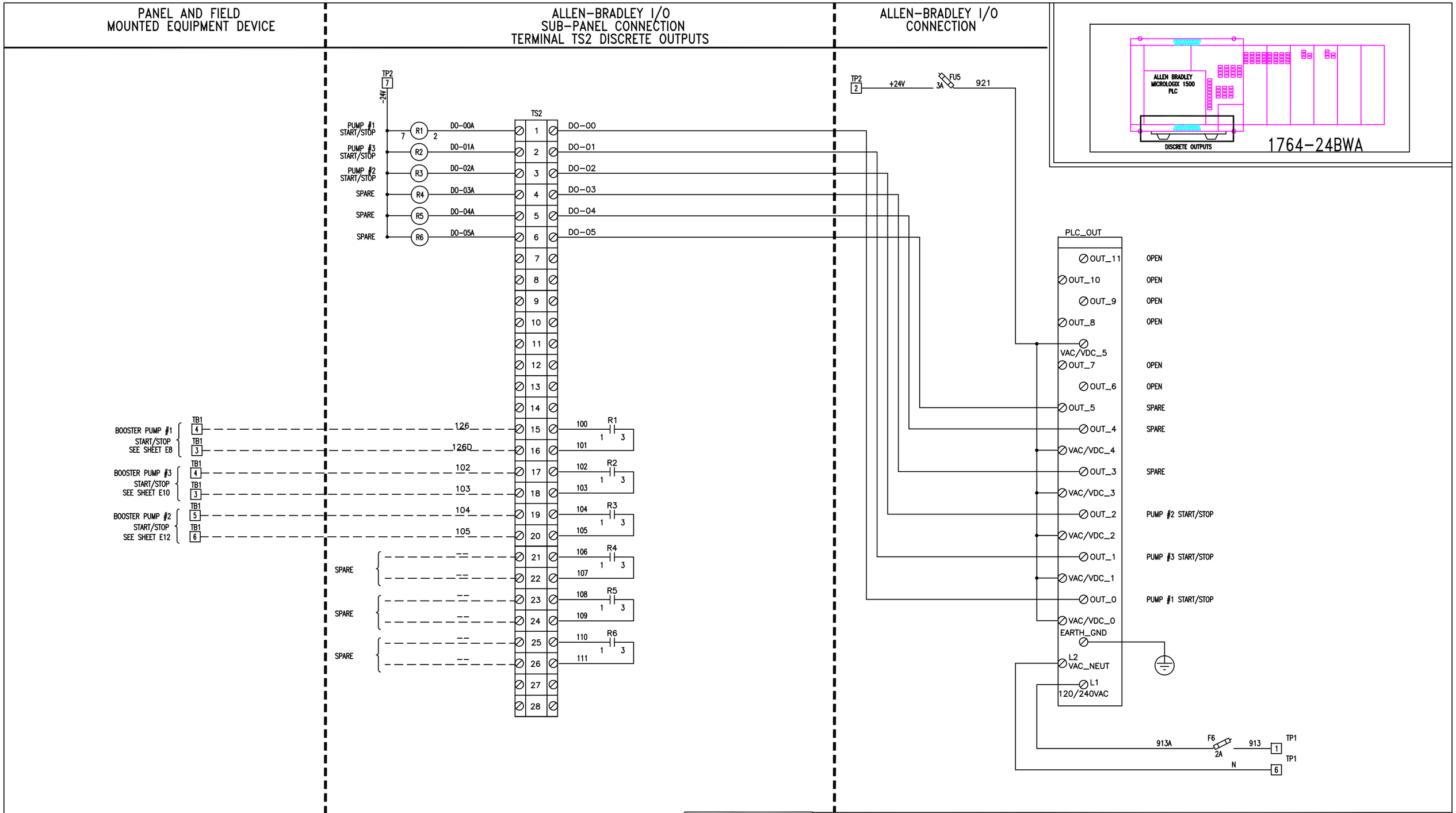

TITLE: APACHEPEAKS PUMPSTATION
RTU DISCRETE OUTPUT CONTROLS
DO 1 – 24VDC

REV.	BY:	DATE:
A	JRJ – AS-BUILT	4/07/09
B	---	---

DWG BY: JRJ
DATE: 10/11/07
APPD BY: ROD ROBERTSON
JOB No: 08-828
SCALE: NONE
UL508 APPROVAL MFR# E164765
FILE NAME: BLUES\APACHEPEAKS\E18
SHEET 18 OF 21

E18

Alliance Service & Control Specialists
4846 S. 40Th. St. Phoenix, Az 85040
(602) 431-8434

PROJECT
CITY OF GLOBE
APACHEPEAKS
POWER UPGRADES

AS-BUILT

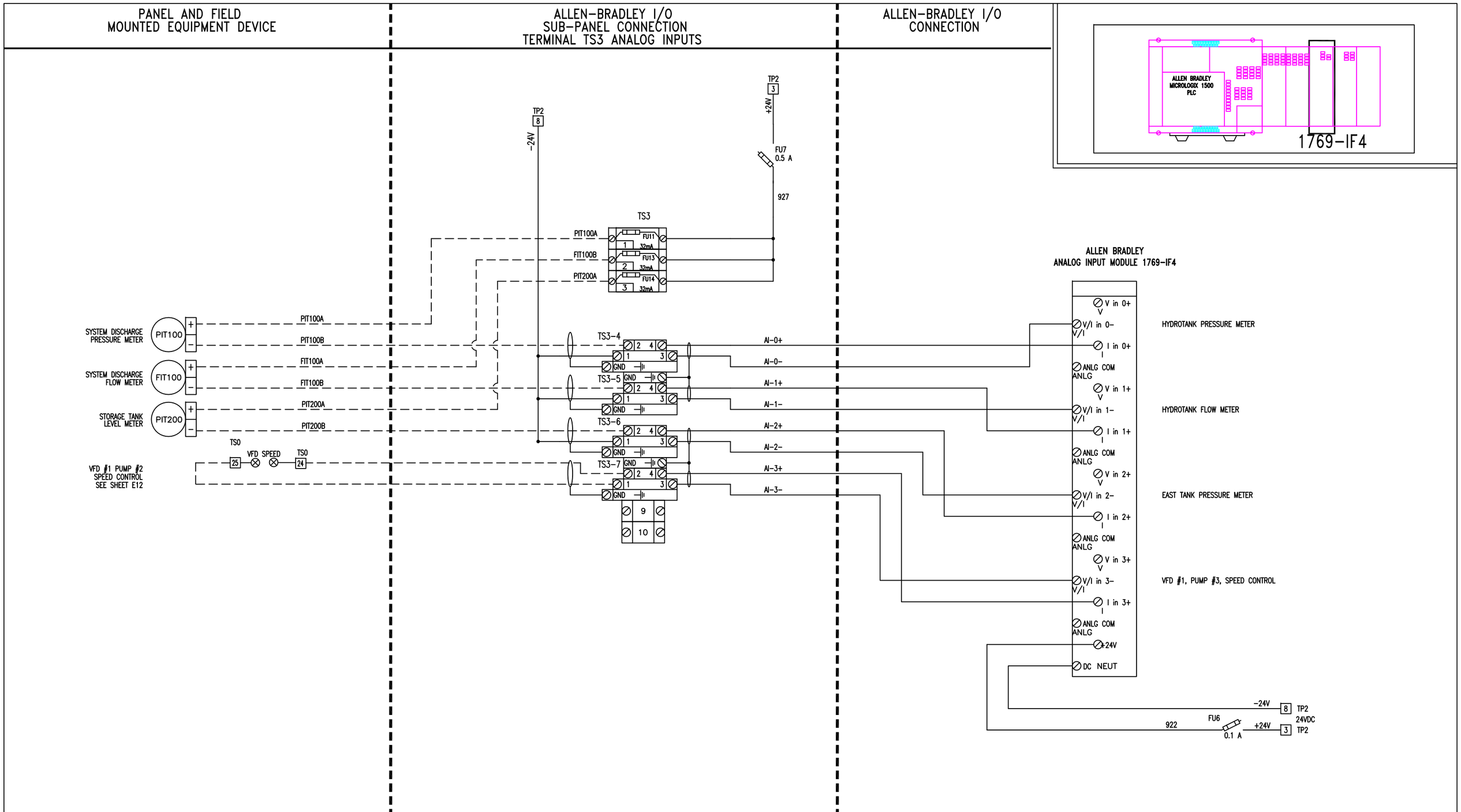

TITLE: APACHEPEAKS PUMPSTATION
RTU ANALOG INPUT CONTROLS
AI 1 – 24VDC

REV.	BY:	DATE:
A	JRJ – AS-BUILT	4/07/09
B	---	---

DWG BY: JRJ
DATE: 10/25/07
APPD BY: ROD ROBERTSON
JOB No: 08-828
SCALE: NONE
UL508 APPROVAL MFR# E164765
FILE NAME: BLUES\APACHEPEAKS\E19
SHEET 19 OF 21

E19

Alliance Service & Control Specialists
4846 S. 40Th. St. Phoenix, Az 85040
(602) 431-8434

PROJECT
CITY OF GLOBE
APACHEPEAKS
POWER UPGRADES

AS-BUILT

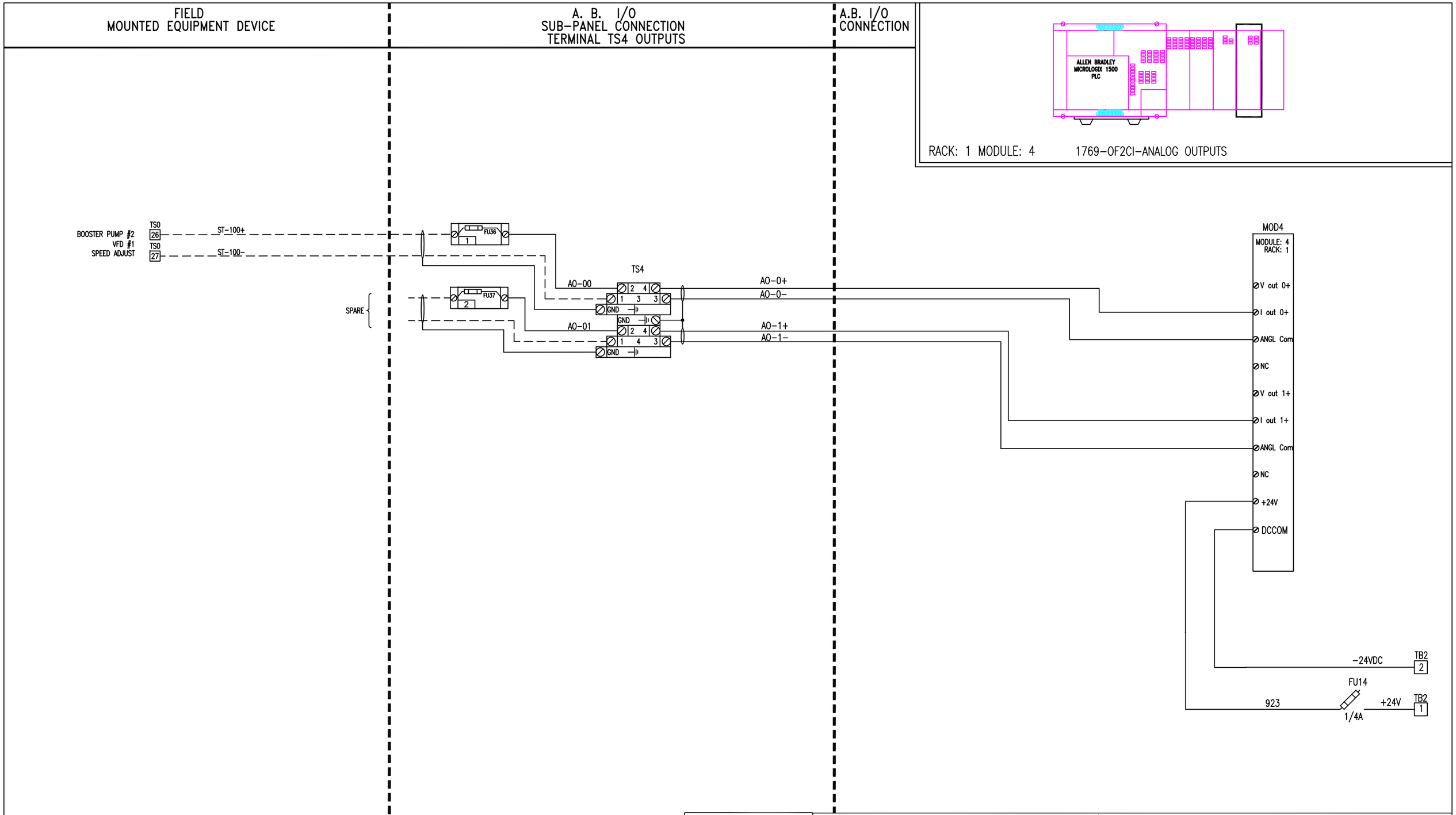

TITLE: APACHEPEAKS PUMPSTATION
RTU ANALOG OUTPUT CONTROLS
AO 1 - 24VDC

REV.	BY:	DATE:
A	JRJ - AS-BUILT	4/07/09
B	---	---

DWG BY: JRJ
DATE: 10/12/07
APPD BY: ROD ROBERTSON
JOB No: 08-828
SCALE: NONE
UL508 APPROVAL MFR/ E164765
FILE NAME: BLUES\APACHEPEAKS\E20
SHEET 20 OF 21

E20

Alliance Service & Control Specialists
4846 S. 40Th. St. Phoenix, Az 85040
(602) 431-8434

PROJECT
CITY OF GLOBE
APACHEPEAKS
POWER UPGRADES

AS-BUILT